Transformer Neural Networks

Matthias Karlbauer
matthias.karlbauer@ecmwf.int

Credit: built on slides by Christian Lessig

ECMWF

© ECMWF February 25, 2026

Introduction

- About me:
  - Cognitive scientist by training, specialised in machine learning
  - Worked a lot with recurrent neural networks (RNNs)
  - PhD about global weather prediction with neural networks

- What I'm doing at ECMWF
  - Joined WeatherGenerator in July 2025
  - Earth system predictability, extended range
  - Stabilizing rollout

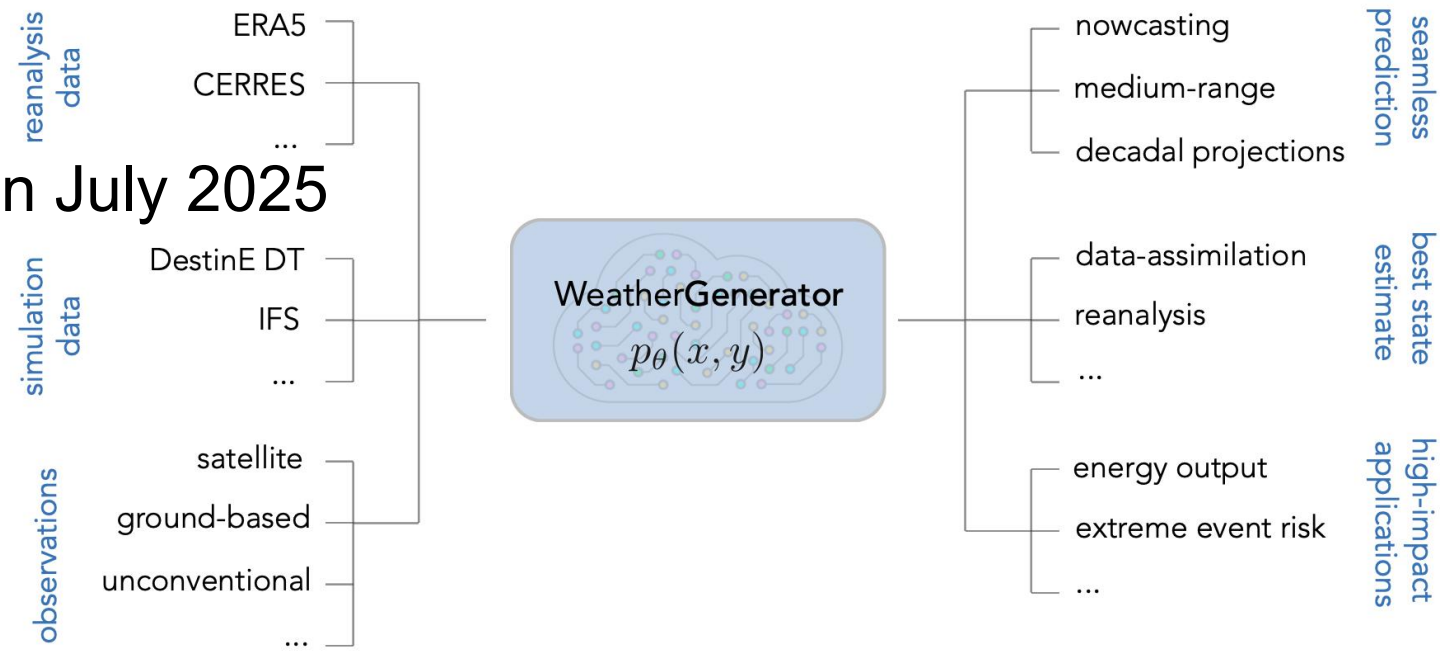

Introduction

- What are transformers made for?
  - Seq2seq modelling: predict next token in a sequence, e.g., next word in a sentence:

My house is … ?

https://www.ruumtinyhouses.com/img/og.png

- In this lecture:
  - What are the ingredients that make a transformer tick?
  - Why is the transformer architecture so prominent today?

- Transformers are nowadays building blocks in almost any deep learning model (“GPT” in ChatGPT stands for “generative pre-trained transformer”)

Motivation

- Recurrent neural networks
  - Standard for temporal sequence problems (e.g. in natural language processing up to 2018). My house is …

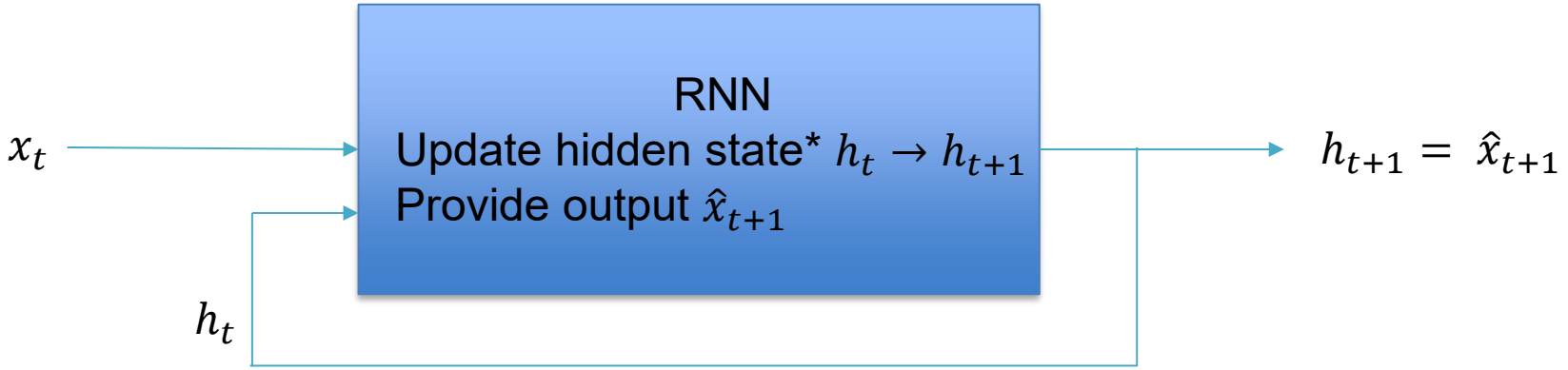

- Implicit connection to past states
- Training is difficult to parallelize

*Hidden state update:

$$h_{t+1} = W_{IH}x_t + W_{HH}h_t$$

Motivation

- Architecture that can be parallelized more efficiently
- More direct interaction between information, in particular “far away” one

Provided proper attribution is provided, Google hereby grants permission to reproduce the tables and figures in this paper solely for use in journalistic or scholarly works.

Attention Is All You Need

Ashish Vaswani* Google Brain avaswani@google.com

Noam Shazeer* Google Brain noam@google.com

Niki Parmar* Google Research nikip@google.com

Jakob Uszkoreit* Google Research usz@google.com

Llion Jones* Google Research

Aidan N. Gomez* † University of Toronto

Łukasz Kaiser* Google Brain

What is attention?

- Similarity measure between hidden/latent states $\{t_i\}_{i=1}^{N}$
  - Hidden/latent states are vectors in $\mathbb{R}^E$

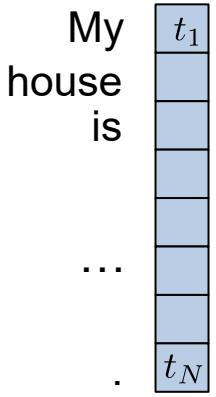

What is attention?

- Similarity measure between hidden/latent states $\{t_i\}_{i=1}^{N}$
  - Hidden/latent states are vectors in $\mathbb{R}^E$

t_i are known as **tokens**

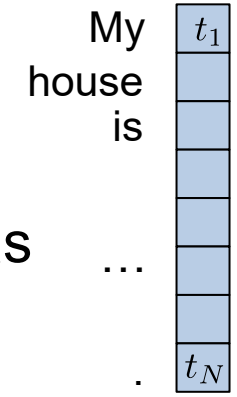

What is attention?

- Similarity measure between hidden/latent states $\{t_i\}_{i=1}^{N}$
  - Hidden/latent states are vectors in $\mathbb{R}^E$
  - Apply dot product to measure similarity

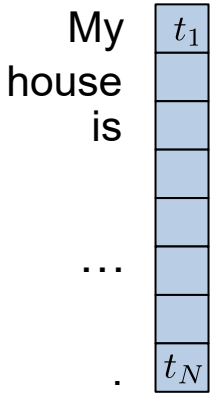

What is attention?

- Similarity measure between hidden/latent states $\{t_i\}_{i=1}^{N}$
  - Hidden/latent states are vectors in $\mathbb{R}^E$
  - Apply dot product to measure similarity

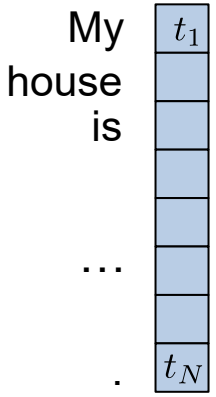

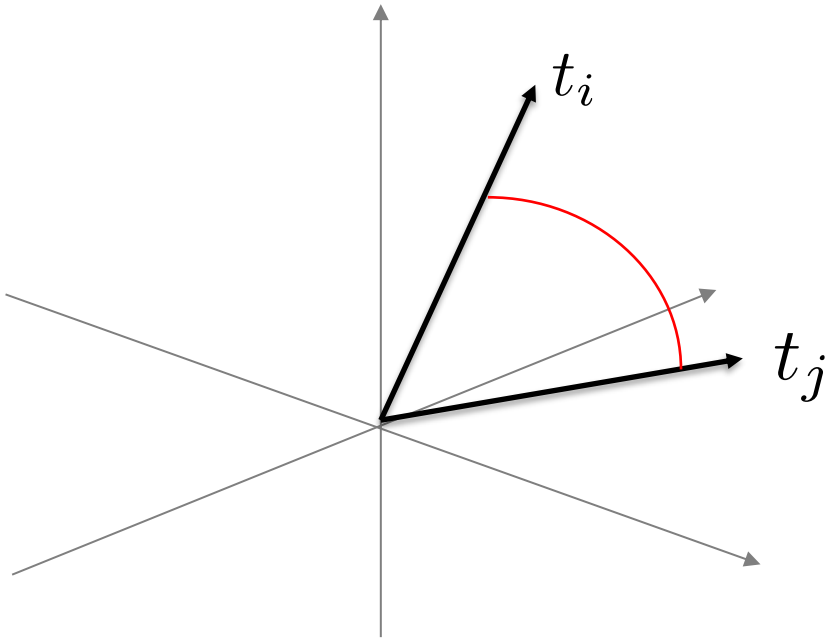

What is attention?

- Similarity measure between hidden/latent states $\{t_i\}_{i=1}^{N}$
  - Hidden/latent states are vectors in $\mathbb{R}^E$
  - Apply dot product to measure similarity
  - Update hidden/latent state based on similarities

$$t_i \cdot t_j$$

What is attention?

- Similarity measure between hidden/latent states $\{t_i\}_{i=1}^{N}$
  - Hidden/latent states are vectors in $\mathbb{R}^E$
  - Apply dot product to measure similarity
  - Update hidden/latent state based on similarities

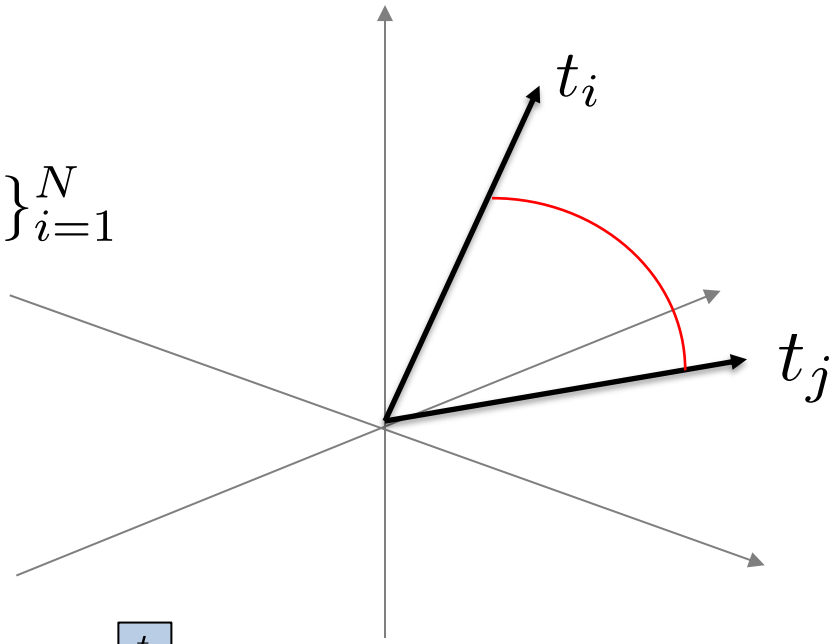

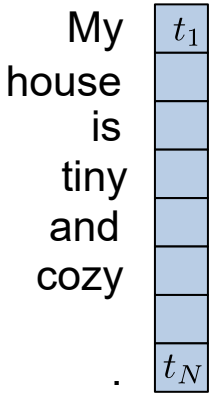

$$\tilde{t}_i = \sum_{j=1}^{N} (t_i \cdot t_j) t_j$$

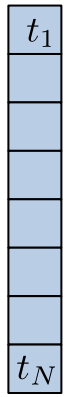

What is attention?

- Similarity measure between hidden/latent states $\{t_i\}_{i=1}^{N}$
  - Hidden/latent states are vectors in $\mathbb{R}^E$
  - Apply dot product to measure similarity
  - Update hidden/latent state based on similarities

$$\tilde{t}_i = \sum_{j=1}^{N} \sigma(t_i \cdot t_j) t_j$$

softmax nonlinearity
(smoothed/differentiable version of argmax + normalization)

What is attention?

- Softmax

$$\mathrm{Softmax}(x)_i = \frac{e^{x_i}}{\sum_j e^{x_j}} \quad , \; x \in \mathbb{R}^n$$

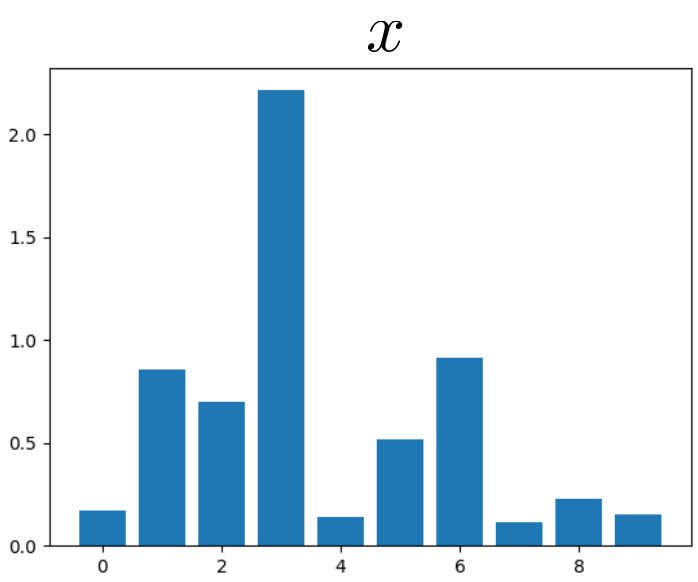

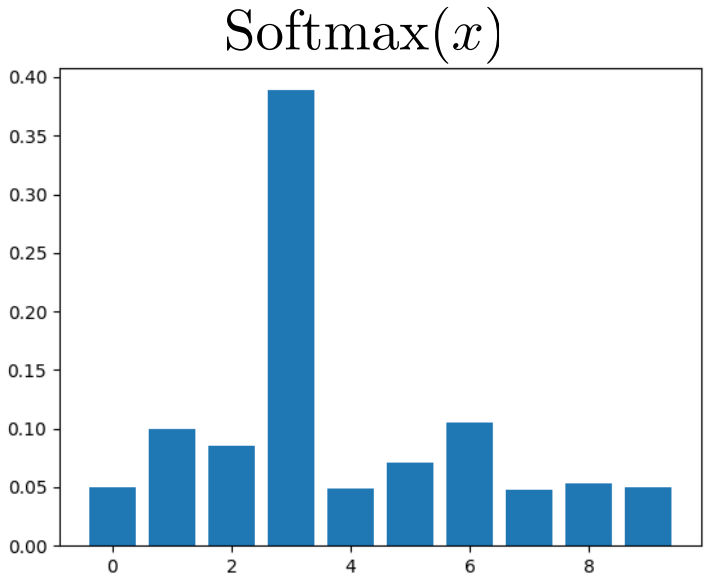

What is attention?

- Similarity measure between hidden/latent states $\{t_i\}_{i=1}^{N}$
  - Hidden/latent states are vectors in $\mathbb{R}^E$
  - Apply dot product to measure similarity
  - Update hidden/latent state based on similarities

$$\tilde{t}_i = \sum_{j=1}^{N} \sigma(t_i \cdot t_j) t_j$$

softmax nonlinearity
(smoothed/differentiable version of argmax + normalization)

What is attention?

- Similarity measure between hidden/latent states $\{t_i\}_{i=1}^{N}$
  - Hidden/latent states are vectors in $\mathbb{R}^E$
  - Apply dot product to measure similarity
  - Update hidden/latent state based on similarities

$$\tilde{t}_i = \sum_{j=1}^{N} \sigma(t_i \cdot t_j) t_j$$

softmax nonlinearity
(smoothed/differentiable version of argmax + normalization)

How to make this “learnable”?

What is attention?

- Similarity measure between hidden/latent states $\{t_i\}_{i=1}^{N}$
  - Hidden/latent states are vectors in $\mathbb{R}^E$
  - Apply dot product to measure similarity
  - Update hidden/latent state based on similarities

$$q_i = P_q t_i$$
$$k_i = P_k t_i$$
$$v_i = P_v t_i$$

$$\tilde{t}_i = \sum_{j=1}^{N} \sigma(t_i \cdot t_j) t_j$$

softmax nonlinearity
(smoothed/differentiable version of argmax + normalization)

How to make this “learnable”?

What is attention?

- Similarity measure between hidden/latent states $\{t_i\}_{i=1}^{N}$
  - Hidden/latent states are vectors in $\mathbb{R}^E$
  - Apply dot product to measure similarity
  - Update hidden/latent state based on similarities

q_i	
k1	v1
k2	v2
…	…
kN	vN

$$q_i = P_q t_i$$
$$k_i = P_k t_i$$
$$v_i = P_v t_i$$

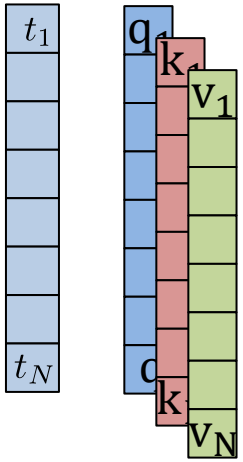

$$\tilde{t}_i = \sum_{j=1}^{N} \sigma(q_i \cdot k_j) v_j$$

softmax nonlinearity
(smoothed/differentiable version of argmax + normalization)

How to make this “learnable”?

What is attention?

- Similarity measure between hidden/latent states $\{t_i\}_{i=1}^{N}$
  - Hidden/latent states are vectors in $\mathbb{R}^E$
  - Apply dot product to measure similarity
  - Update hidden/latent state based on similarities

q_i	
k1	v1
k2	v2
…	…
kN	vN

$$q_i = P_q t_i$$
$$k_i = P_k t_i$$
$$v_i = P_v t_i$$

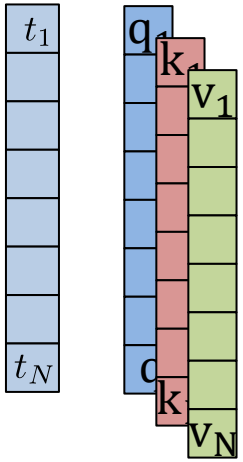

$$\tilde{t}_i = \sum_{j=1}^{N} \sigma(q_i \cdot k_j) v_j$$

Learnable attention module

softmax nonlinearity
(smoothed/differentiable version of argmax + normalization)

What is attention?

- Similarity measure between hidden/latent states $\{t_i\}_{i=1}^{N}$
  - Hidden/latent states are vectors in $\mathbb{R}^E$
  - Apply dot product to measure similarity
  - Update hidden/latent state based on similarities

q_i	
k1	v1
k2	v2
…	…
kN	vN

$$q_i^h = P_q^h t_i$$
$$k_i^h = P_k^h t_i$$
$$v_i^h = P_v^h t_i$$

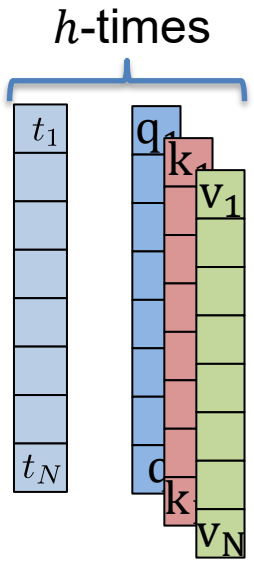

$$\tilde{t}_i = \sum_{j=1}^{N} \sigma(q_i \cdot k_j) v_j$$

softmax nonlinearity
(smoothed/differentiable version of argmax + normalization)

Learnable attention module with multiple heads

What is attention?

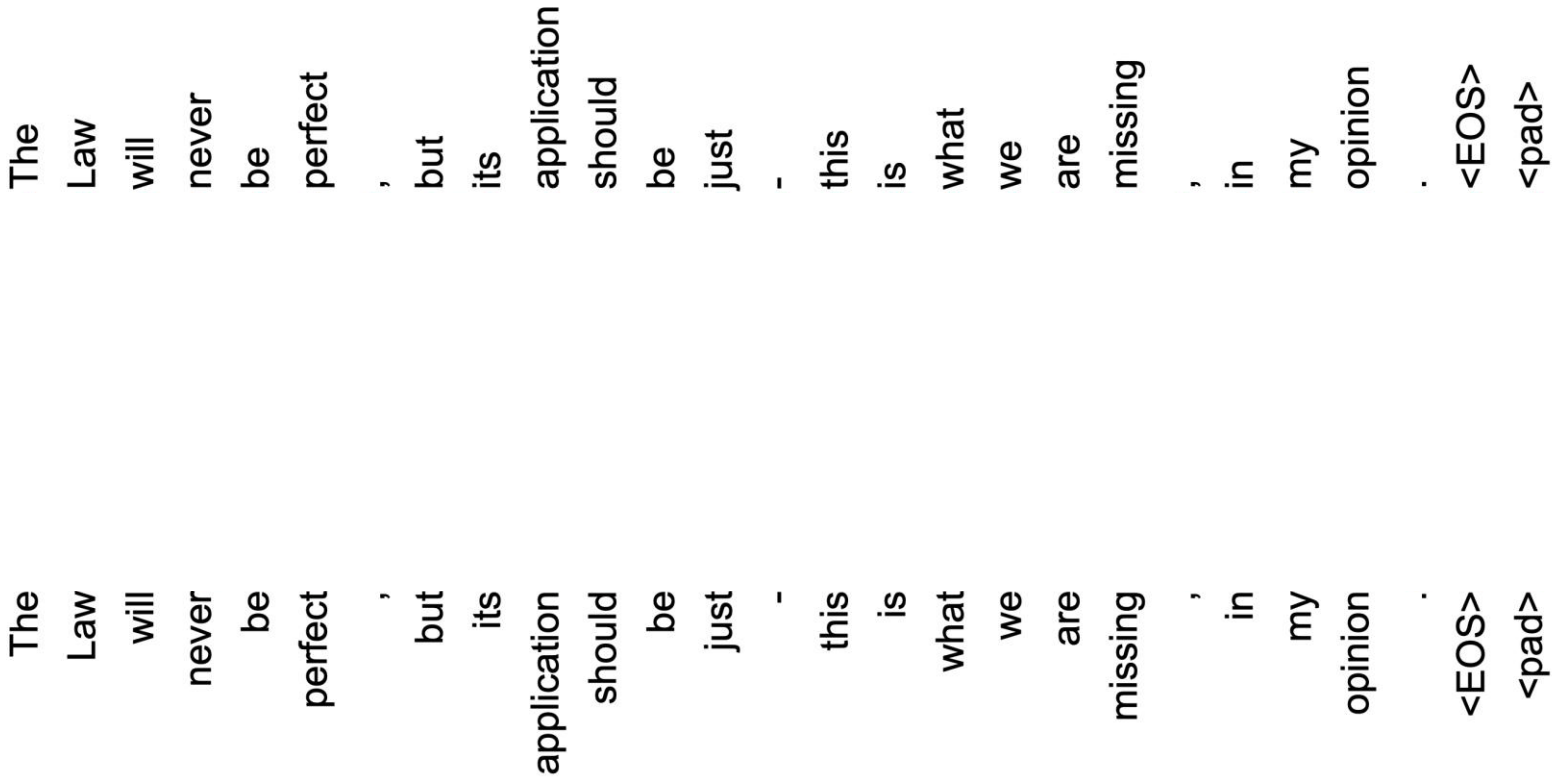

head 1

Vaswani et al., Attention is all you need, 2017, https://arxiv.org/pdf/2310.16764.pdf

What is attention?

head 1

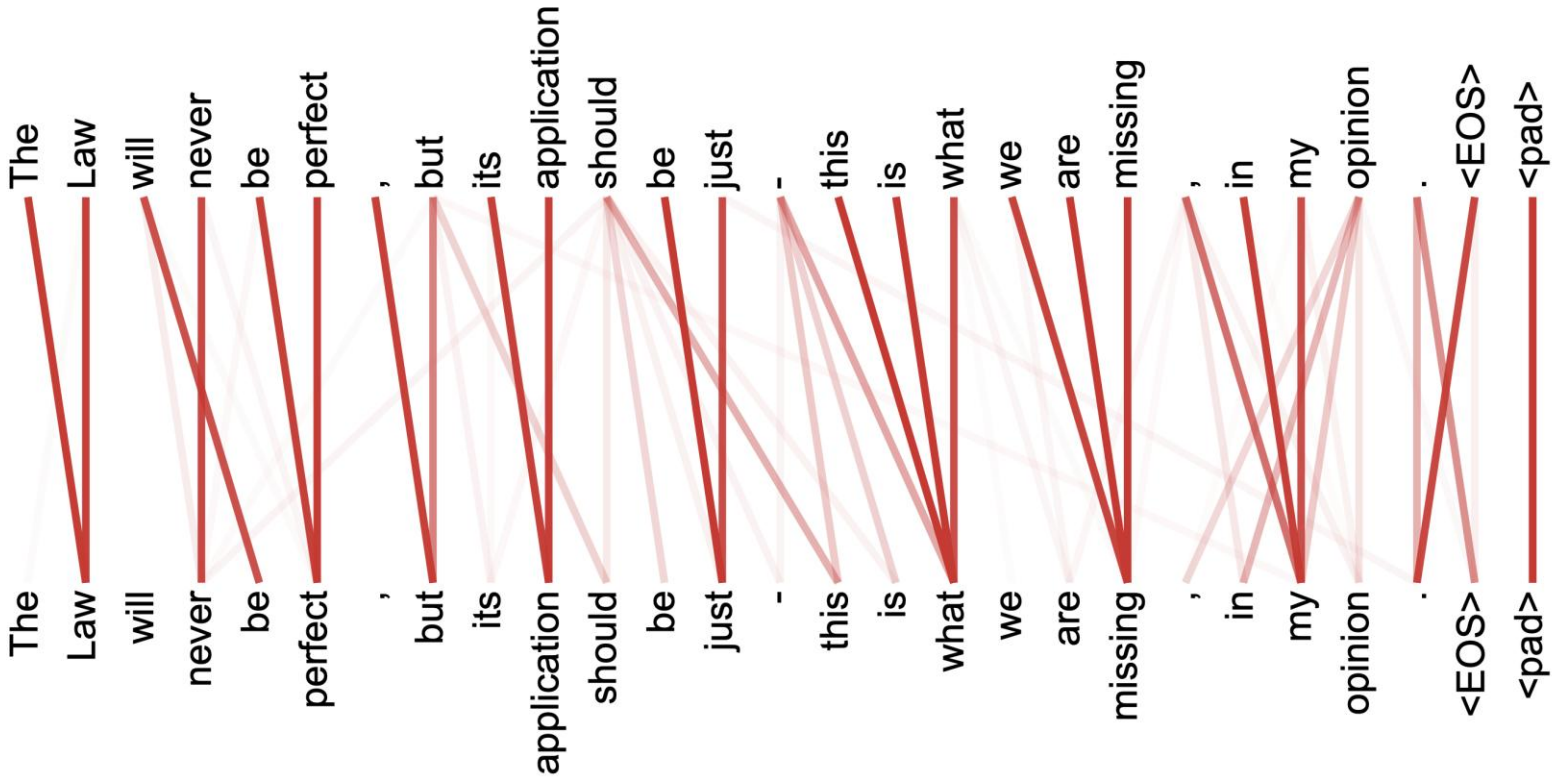

Vaswani et al., Attention is all you need, 2017, https://arxiv.org/pdf/2310.16764.pdf

What is attention?

head 2

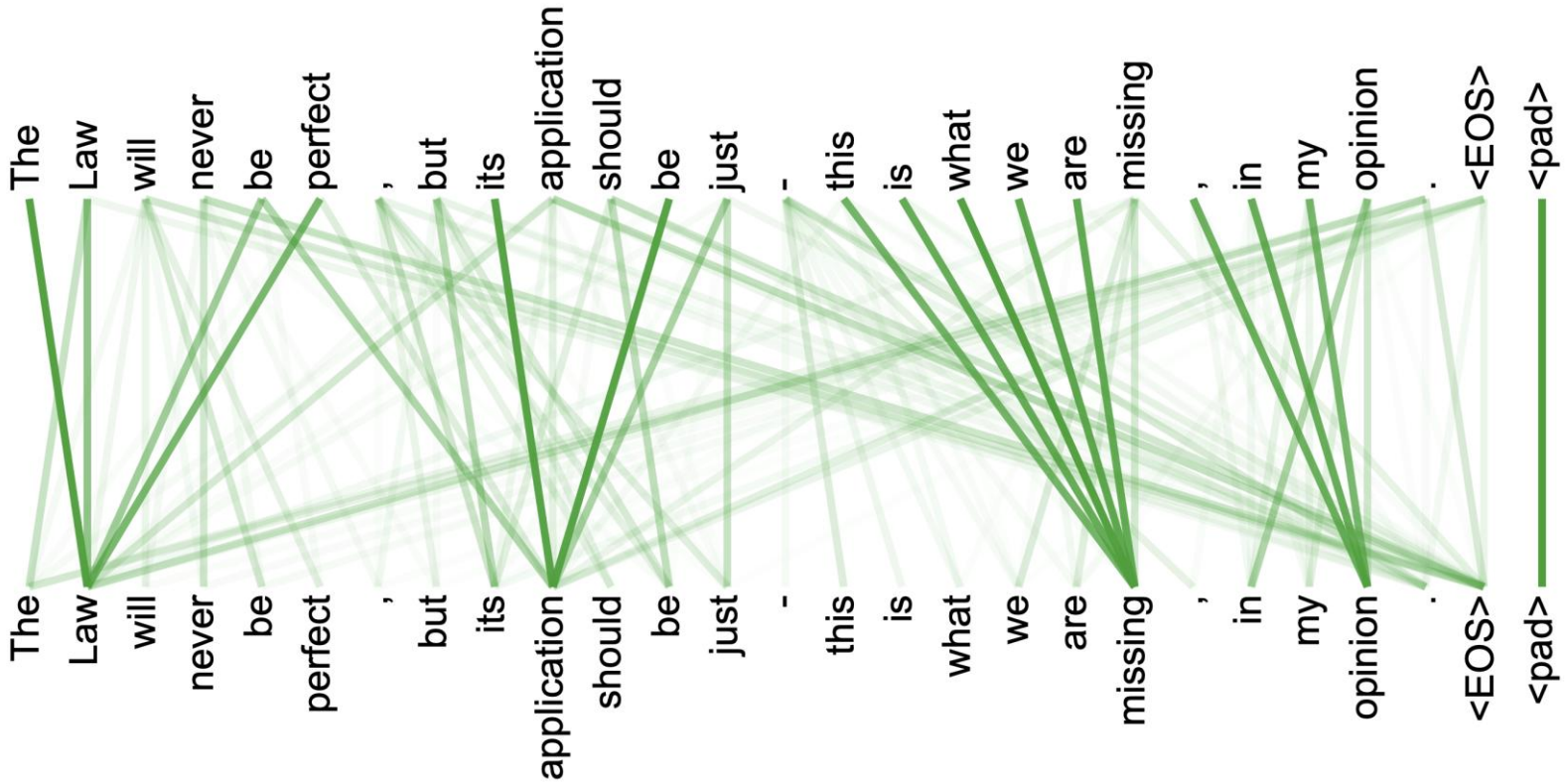

Vaswani et al., Attention is all you need, 2017, https://arxiv.org/pdf/2310.16764.pdf

What is attention?

- Similarity measure between hidden/latent states $\{t_i\}_{i=1}^{N}$
  - Hidden/latent states are vectors in $\mathbb{R}^E$
  - Apply dot product to measure similarity
  - Update hidden/latent state based on similarities

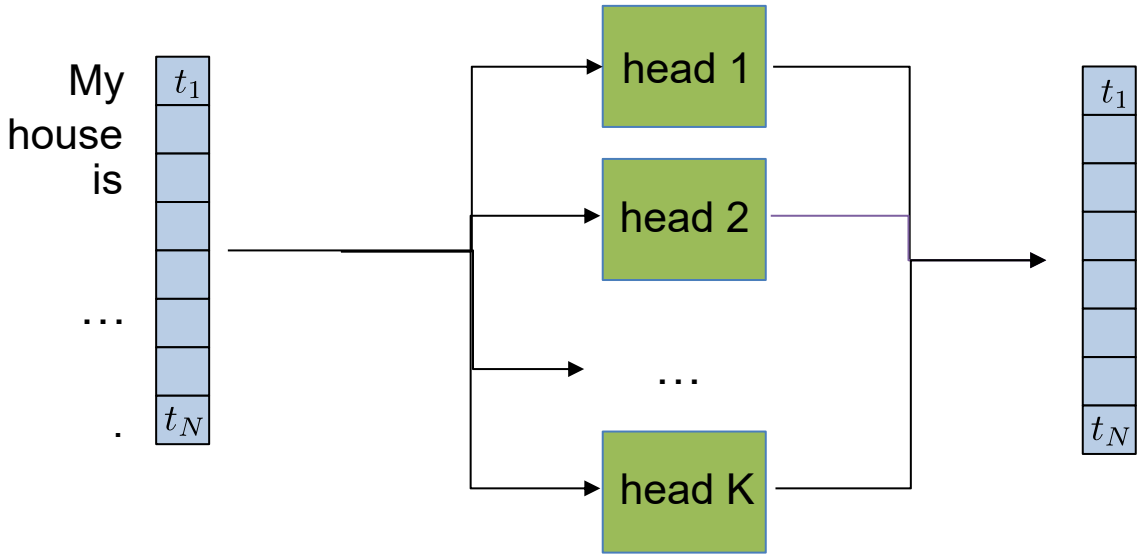

What is attention?

- Similarity measure between hidden/latent states $\{t_i\}_{i=1}^{N}$
  - Hidden/latent states are vectors in $\mathbb{R}^E$
  - Apply dot product to measure similarity
  - Update hidden/latent state based on similarities

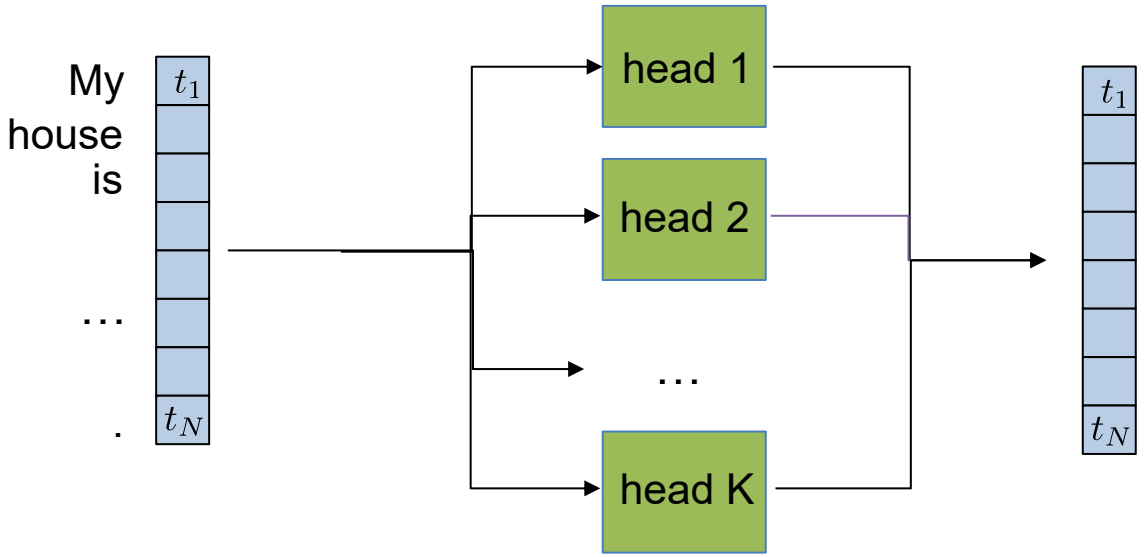

Common choice:

$$t_i \in \mathbb{R}^E$$

$$P_*^h : \mathbb{R}^E \to \mathbb{R}^{E/H}$$

$$\tilde{t}_i = \tilde{P}(\tilde{t}_i^1, \cdots, \tilde{t}_i^H)$$

What is attention?

- Similarity measure between hidden/latent states $\{t_i\}_{i=1}^{N}$
  - Hidden/latent states are vectors in $\mathbb{R}^E$
  - Apply dot product to measure similarity
  - Update hidden/latent state based on similarities

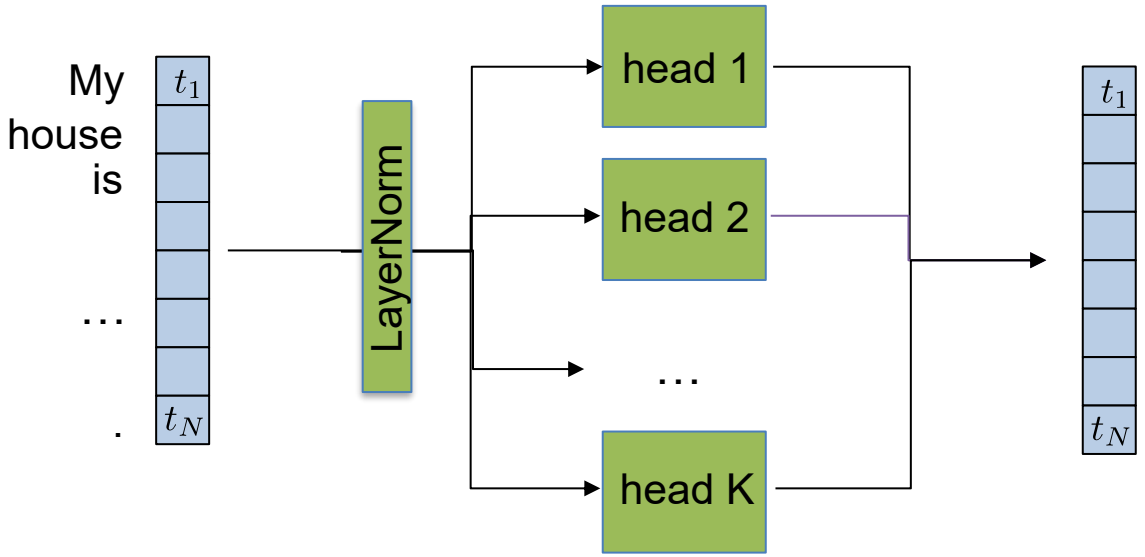

Common choice:

$$t_i \in \mathbb{R}^E$$

$$P_*^h : \mathbb{R}^E \to \mathbb{R}^{E/H}$$

$$\tilde{t}_i = \tilde{P}(\tilde{t}_i^1, \cdots, \tilde{t}_i^H)$$

What is attention?

- Similarity measure between hidden/latent states $\{t_i\}_{i=1}^{N}$
  - Hidden/latent states are vectors in $\mathbb{R}^E$
  - Apply dot product to measure similarity
  - Update hidden/latent state based on similarities

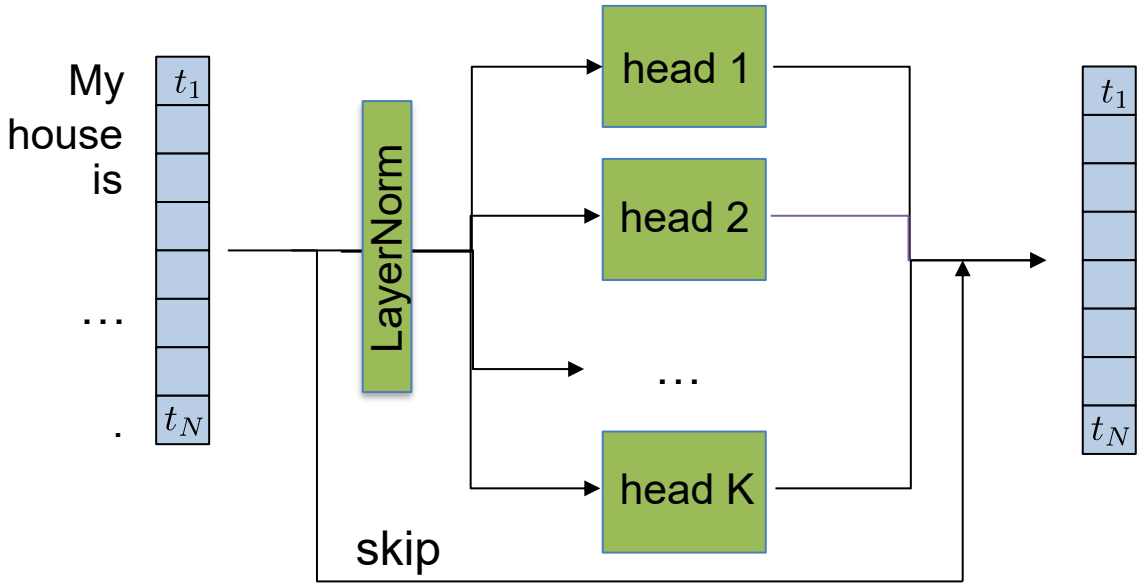

Common choice:

$$t_i \in \mathbb{R}^E$$

$$P_*^h : \mathbb{R}^E \to \mathbb{R}^{E/H}$$

$$\tilde{t}_i = \tilde{P}(\tilde{t}_i^1, \cdots, \tilde{t}_i^H)$$

What is attention?

- Similarity measure between hidden/latent states $\{t_i\}_{i=1}^{N}$
  - Hidden/latent states are vectors in $\mathbb{R}^E$
  - Apply dot product to measure similarity
  - Update hidden/latent state based on similarities

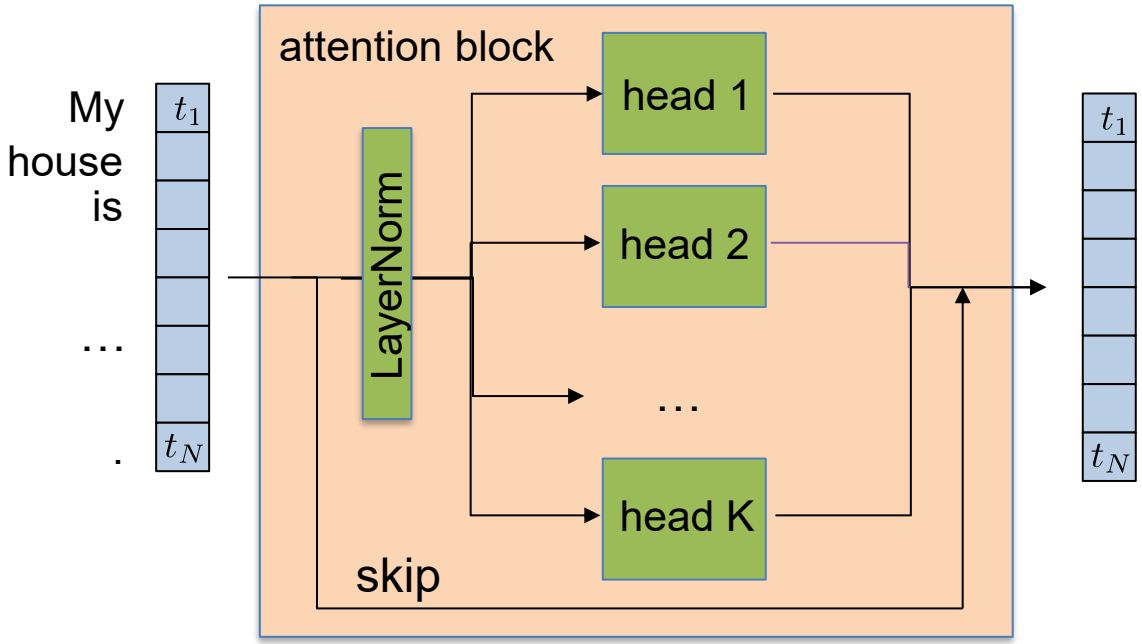

Common choice:

$$t_i \in \mathbb{R}^E$$

$$P_*^h : \mathbb{R}^E \to \mathbb{R}^{E/H}$$

$$\tilde{t}_i = \tilde{P}(\tilde{t}_i^1, \cdots, \tilde{t}_i^H)$$

Transformer encoder

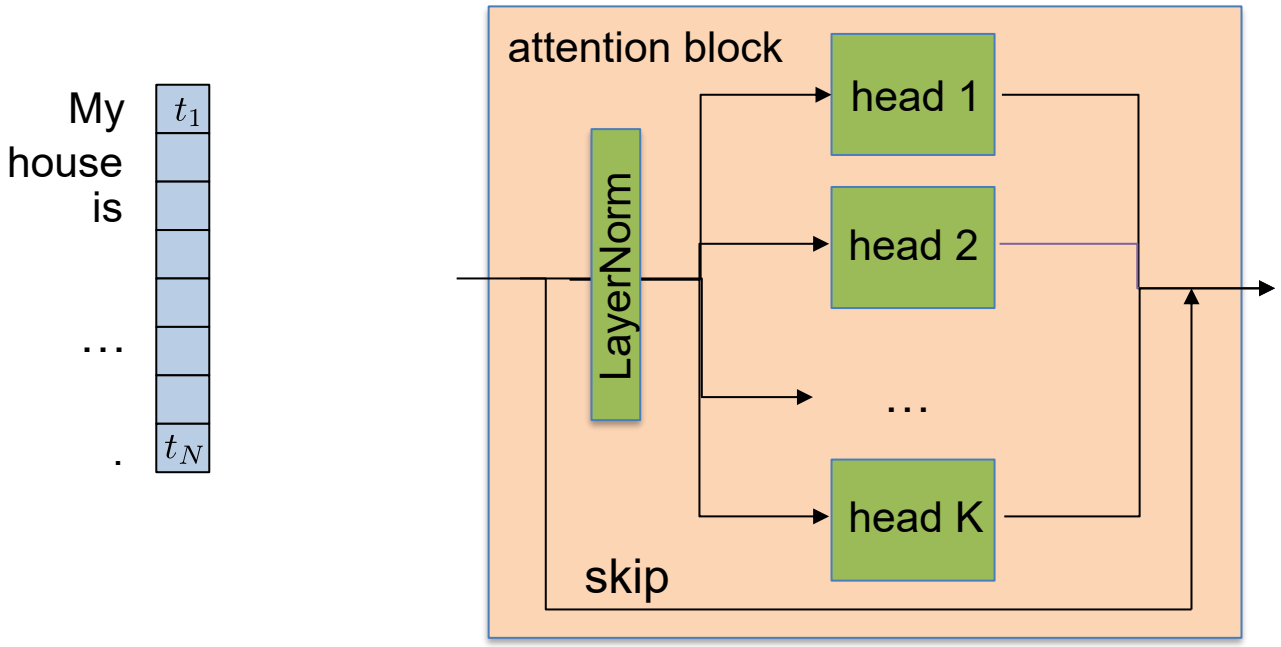

Transformer encoder

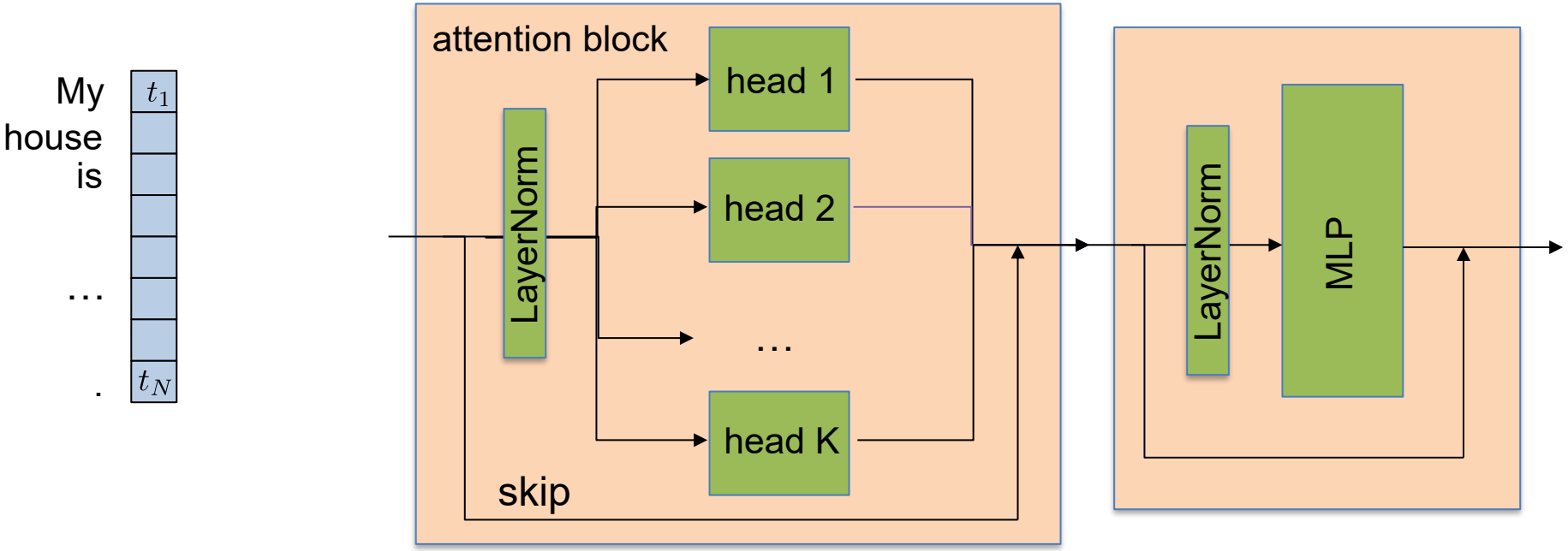

Transformer encoder

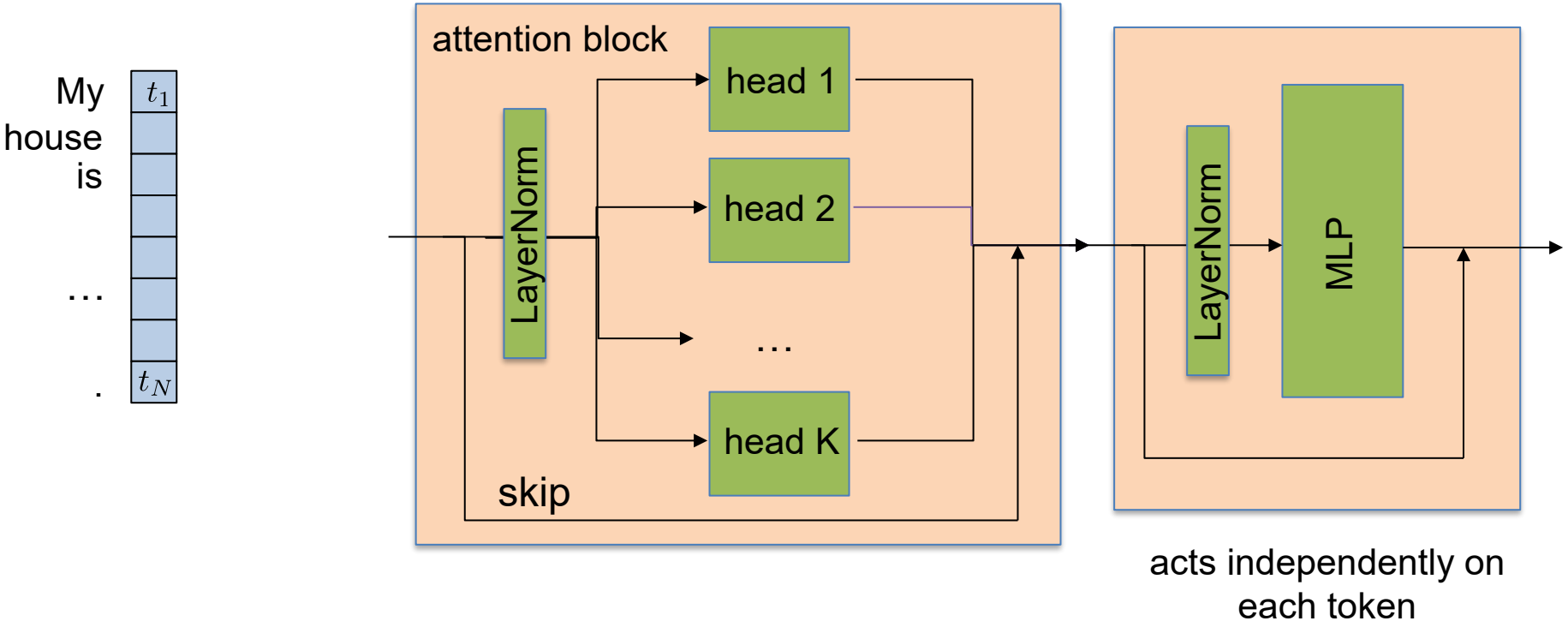

Transformer encoder

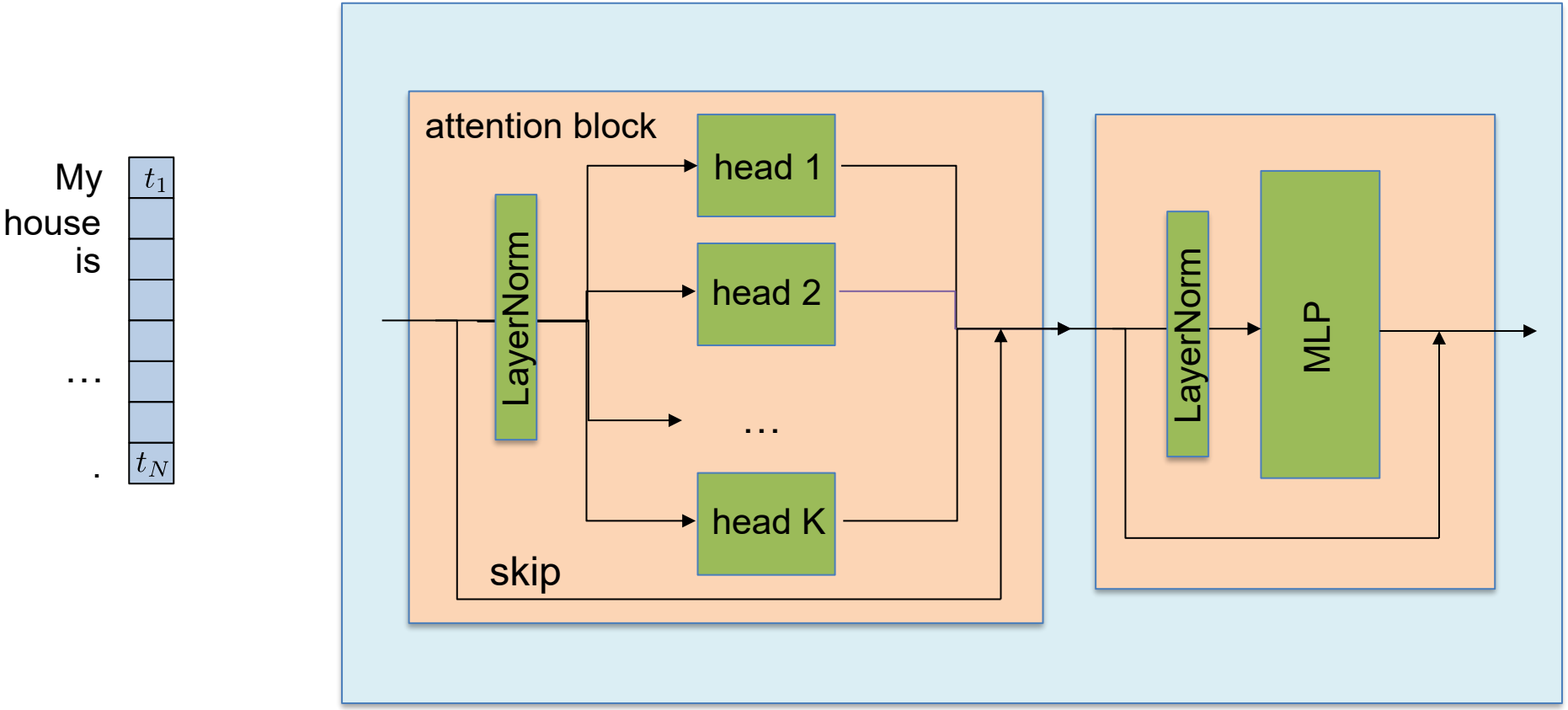

Transformer encoder

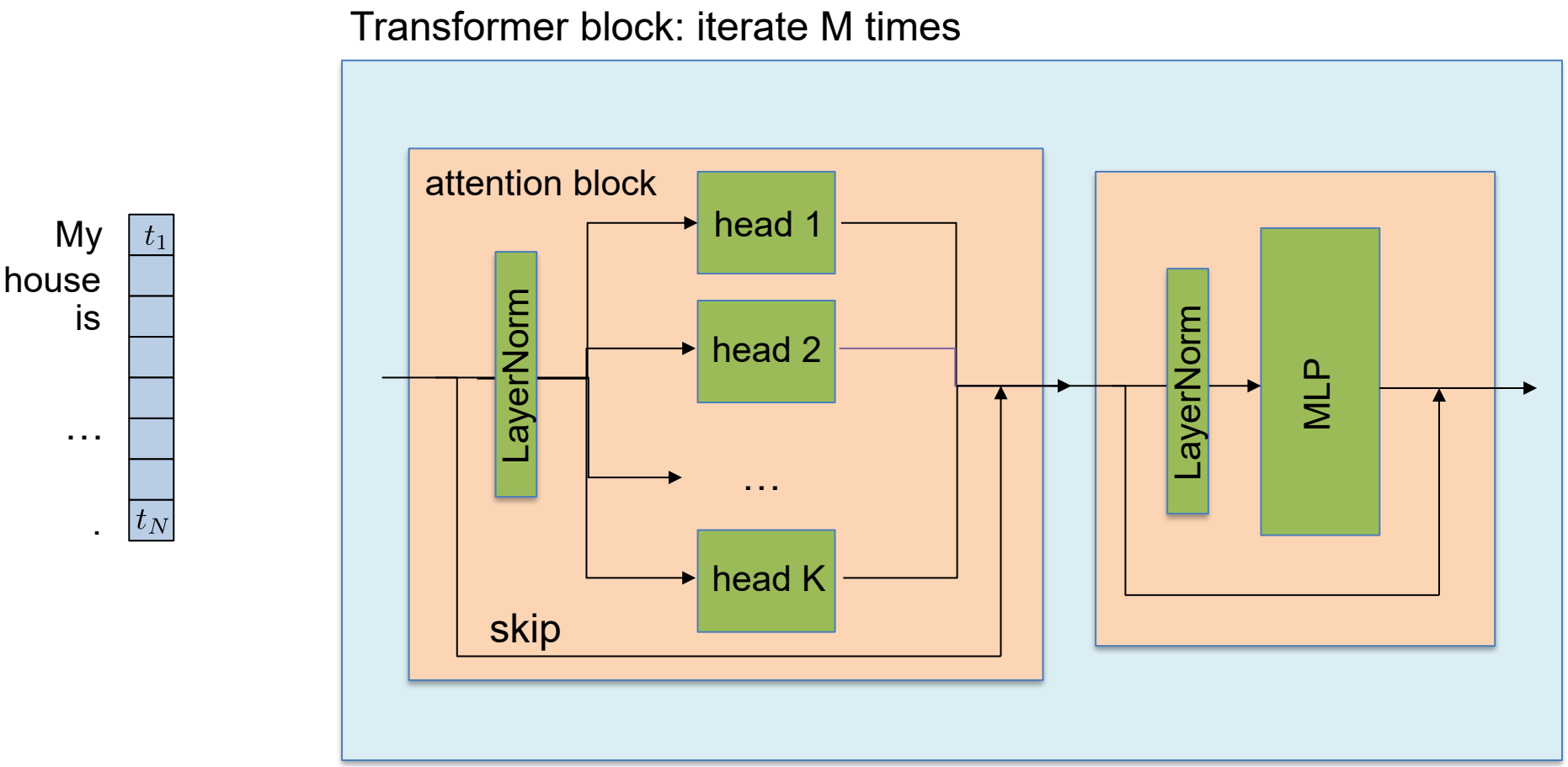

Transformer encoder

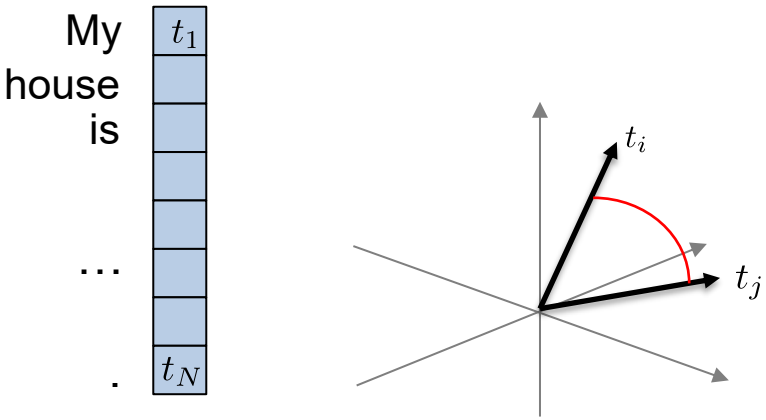

attention block

Transformer encoder

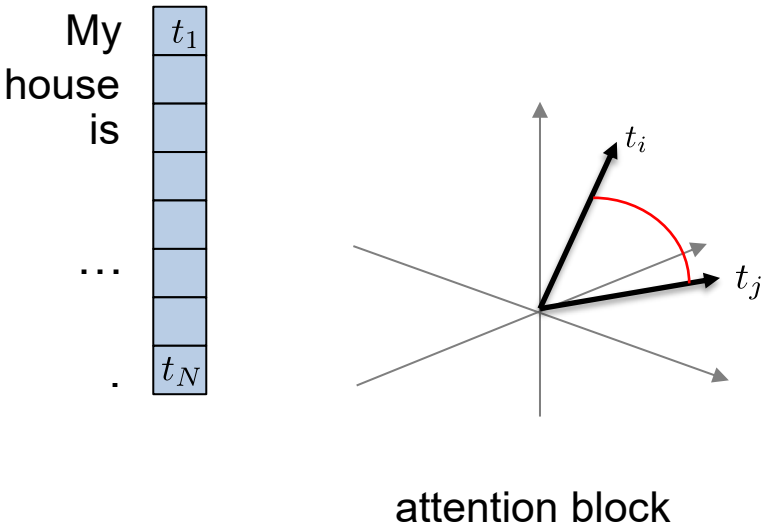

Transformer encoder

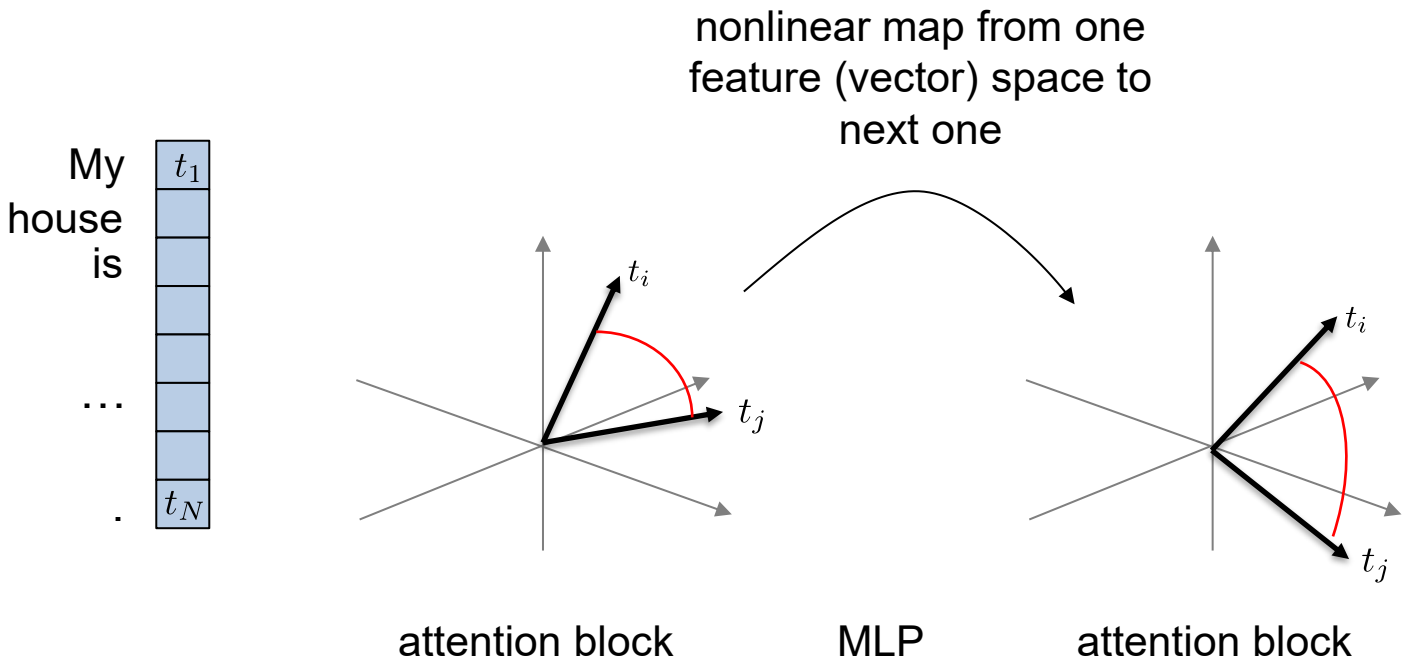

Transformer encoder

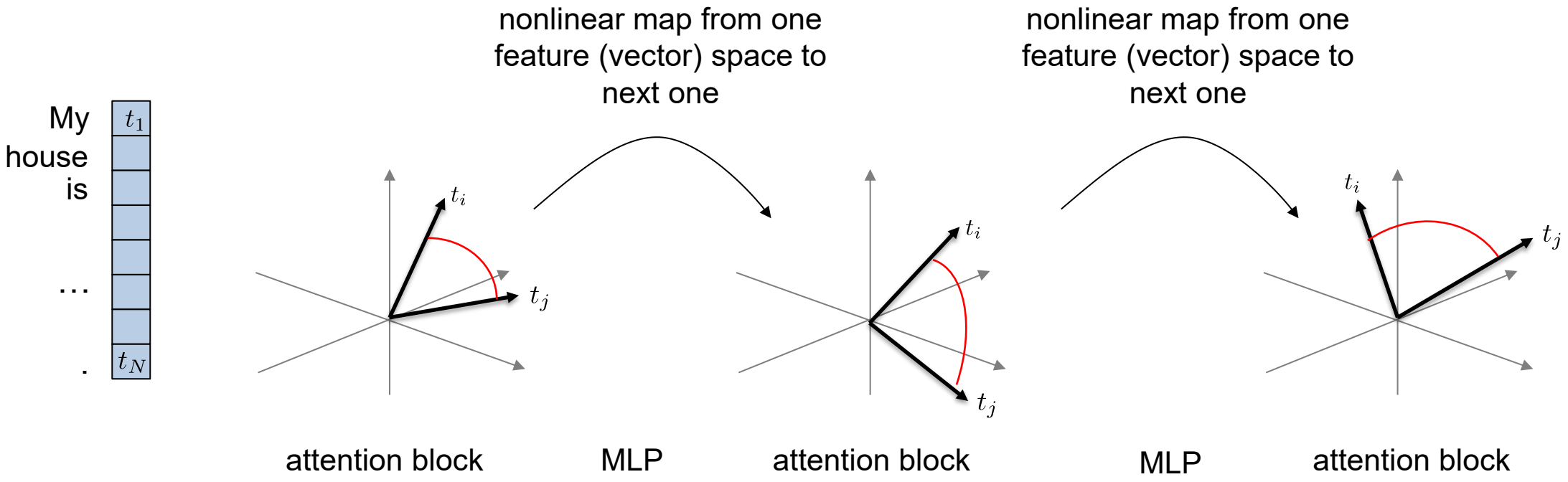

Transformer encoder

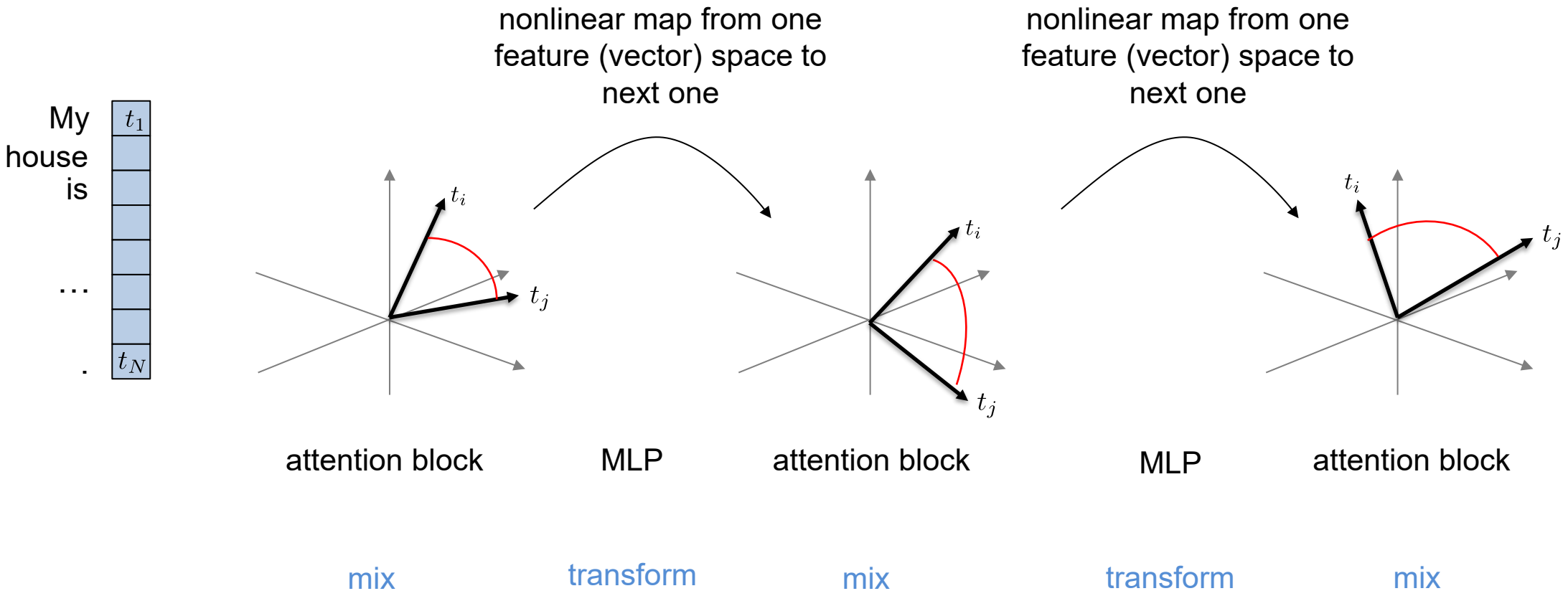

Transformer encoder

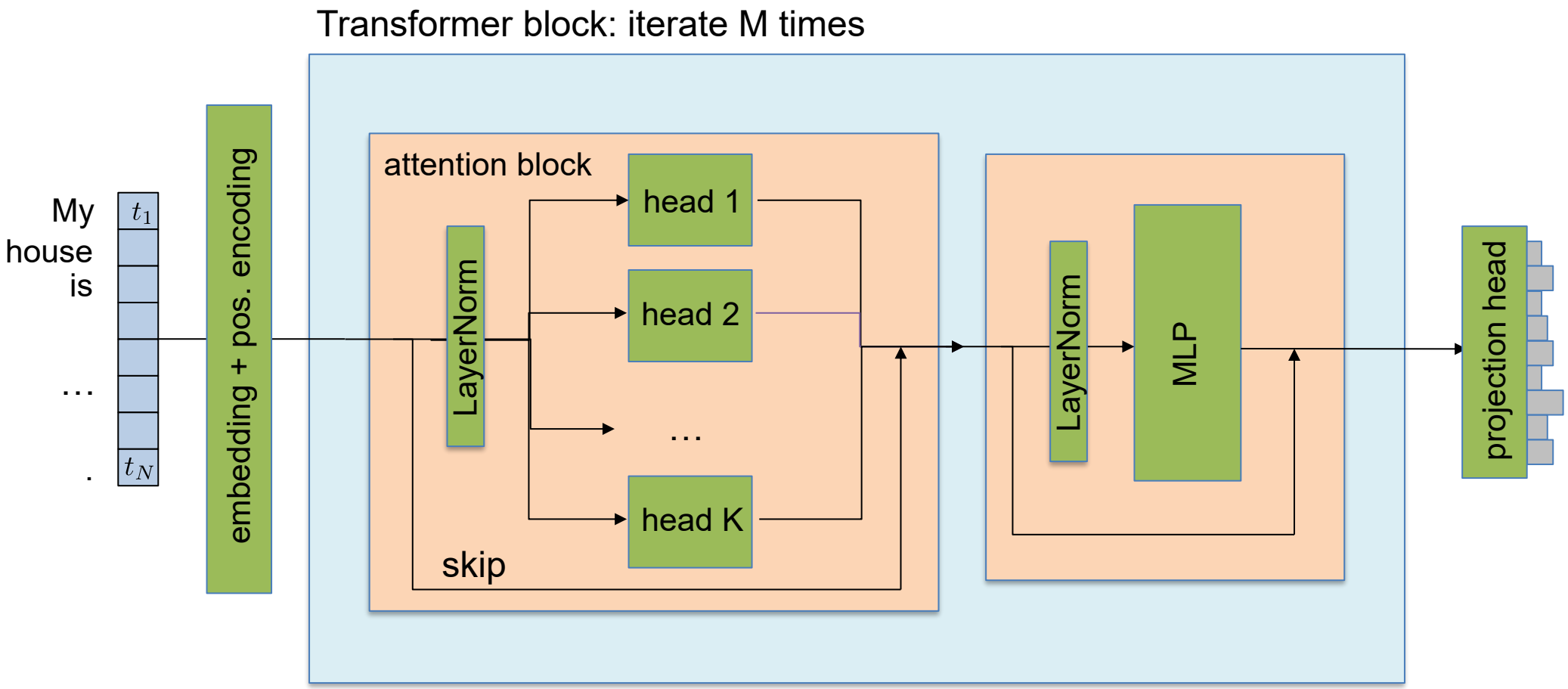

Transformer encoder

- Positional encoding
  - Tokens after embedding form a set without ordering
  - Structure/relationship between tokens needs to be encoded separately
  - Encoding can be fixed or learned
  - Classical approach: harmonic positional encoding that overlays sine/cosine oscillations with frequency that depends on position

.

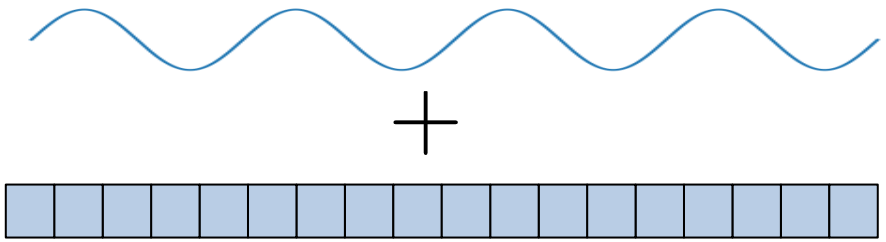

$t_i \in \mathbb{R}^E$

Transformer encoder

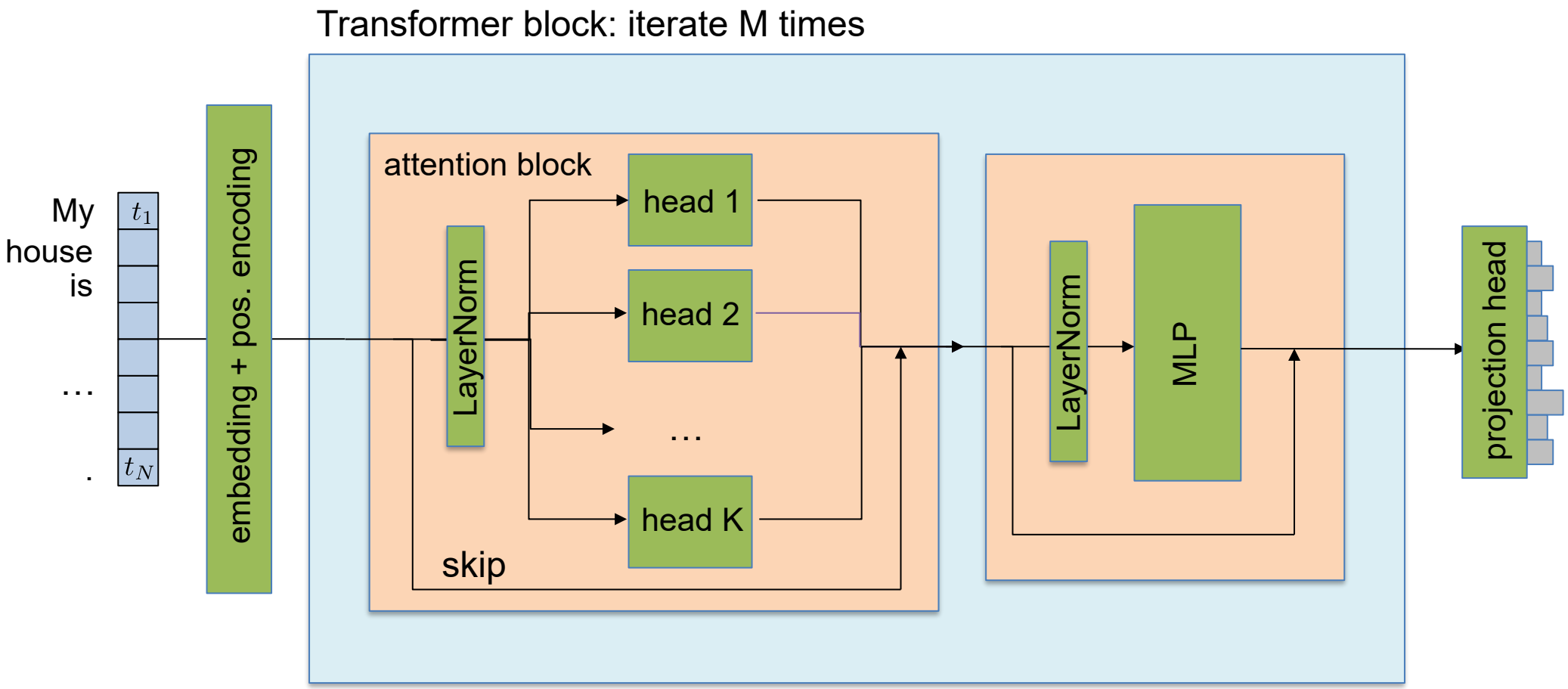

Vision transformer (encoder)

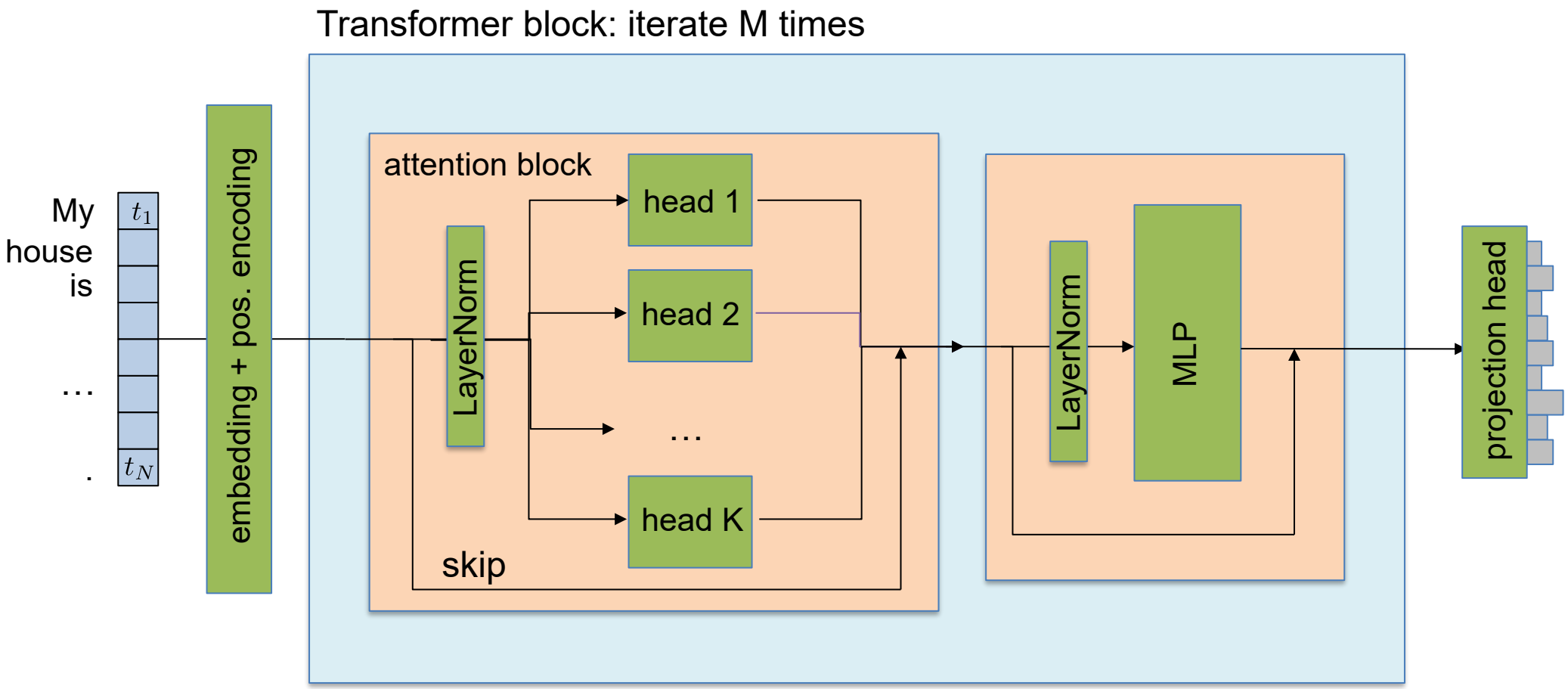

How to define a token when one has a pixel image instead of discrete words?

Vision transformer (encoder)

How to define a token when one has a pixel image instead of discrete words?

Dosovitskiy et al., An Image is Worth 16x16 Words: Transformers for Image Recognition at Scale, 2021, https://arxiv.org/abs/2010.11929

Vision transformer (encoder)

token is small image patch
- enough structure for dot product to make sense
- small enough for attention to provide rich structure

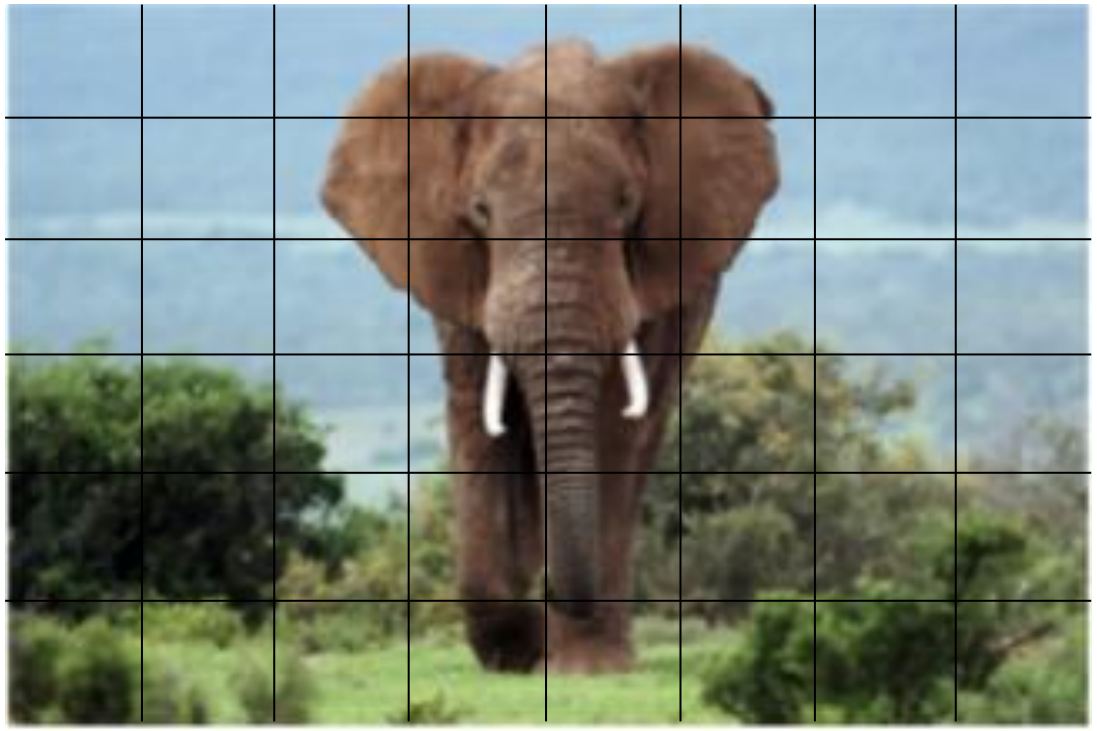

How to define a token when one has a pixel image instead of discrete words?

Vision transformer (encoder)

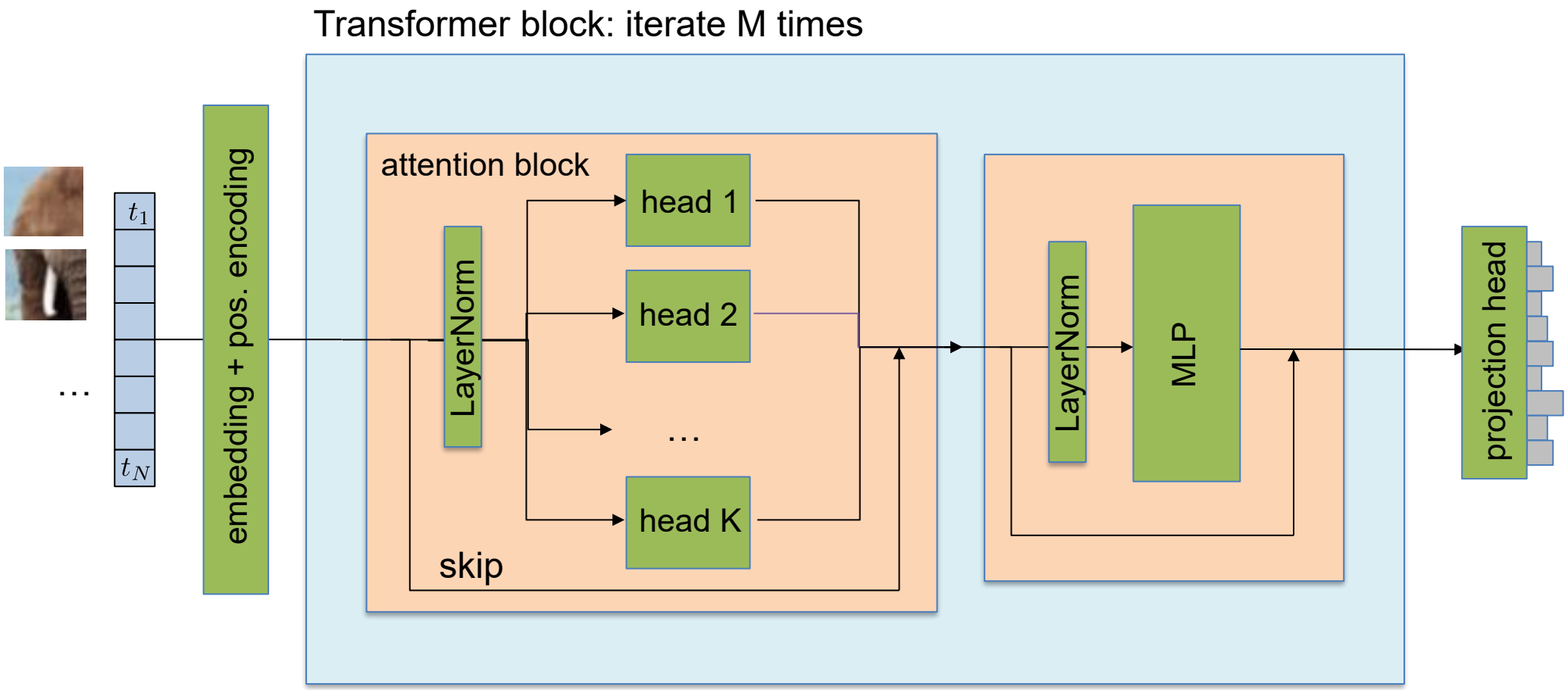

Vision transformer: token is small but non-trivial image patch

X transformer (encoder)

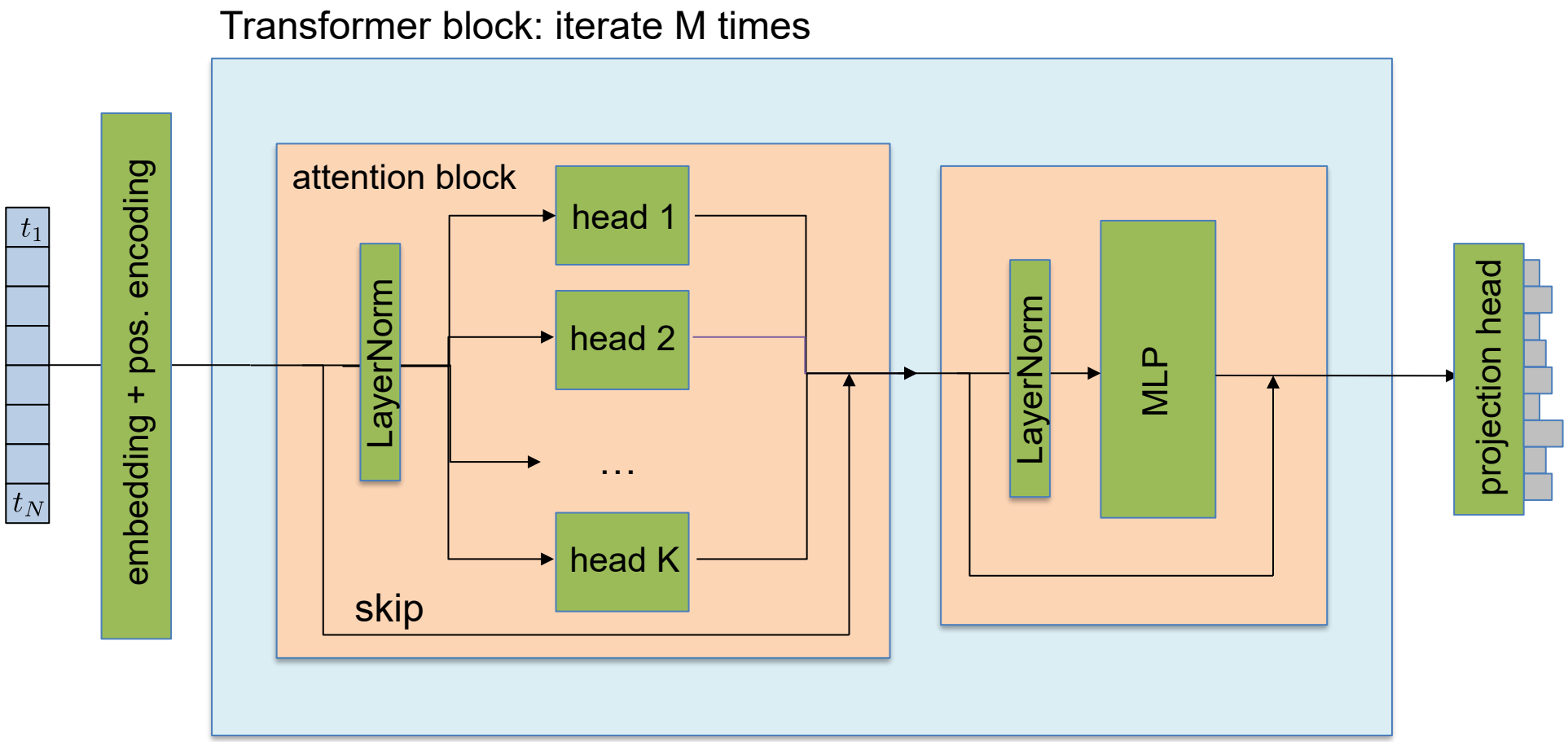

Central (only) question: what is a token, i.e. what is small information “nugget”?

X transformer (encoder)

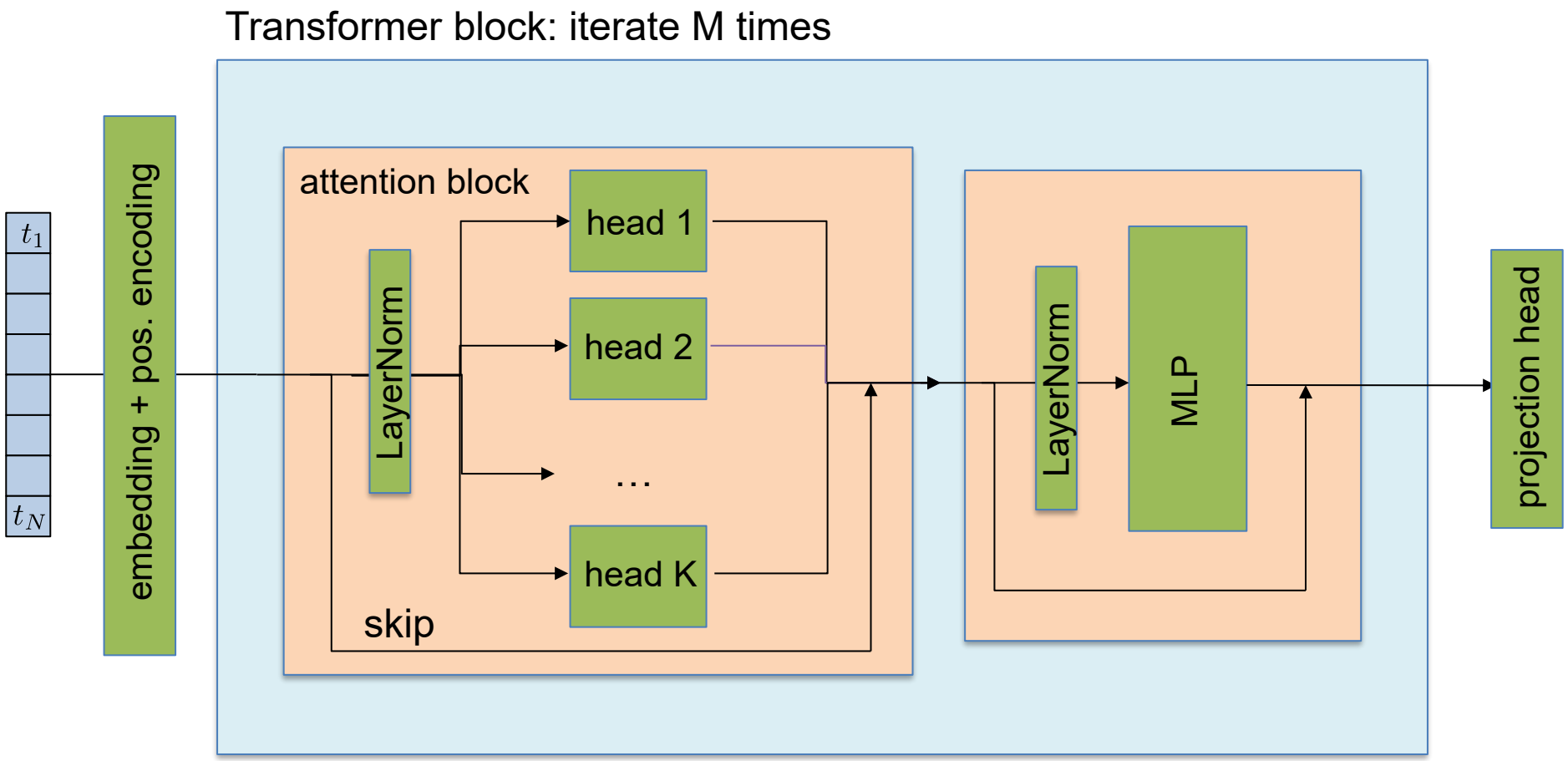

Atmosphere: token as information from small space-time neighborhood

What is attention?

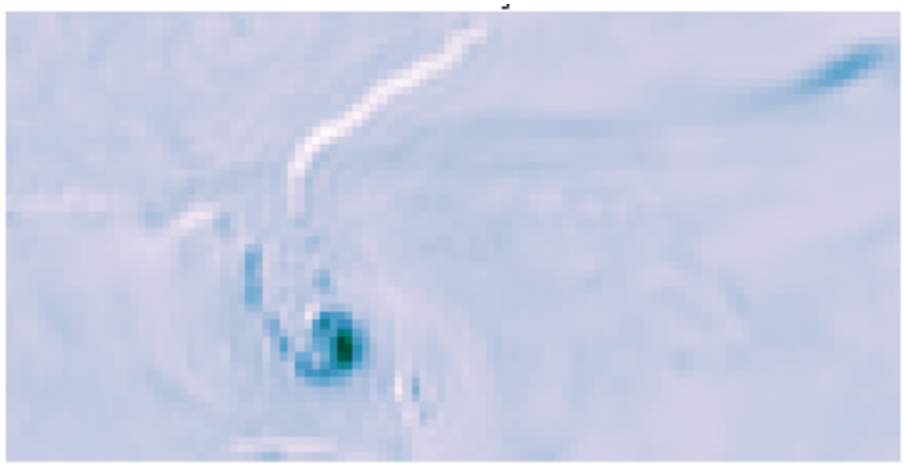

Lessig et al., AtmoRep, 2023, https://arxiv.org/abs/2308.13280

What is attention?

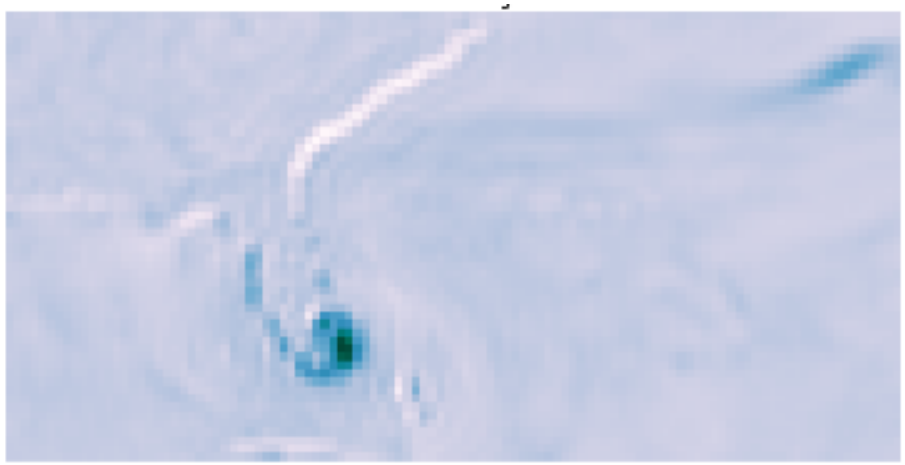

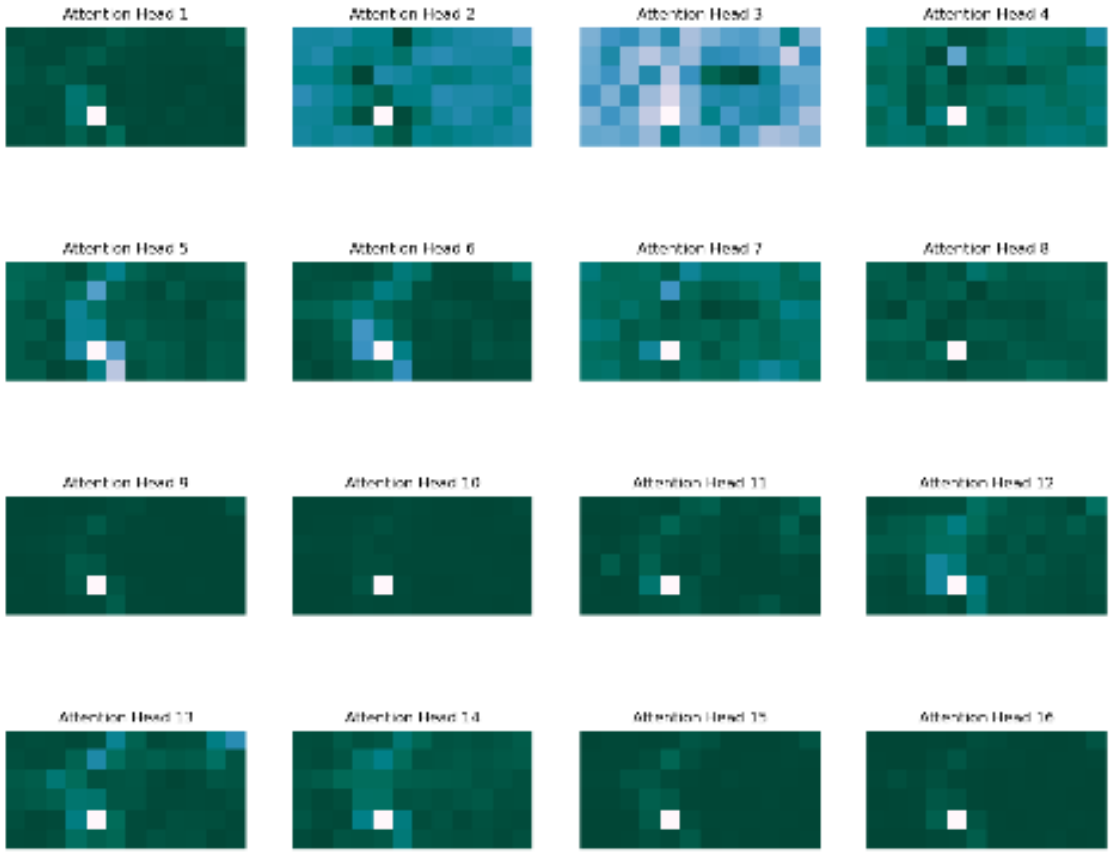

Lessig et al., AtmoRep, 2023, https://arxiv.org/abs/2308.13280

Transformer encoder-decoder

- Introduced in the original transformer paper (Vaswani et al., 2017) for translation tasks
  - Encode: input and encode language A
  - Decoder: decode and output language B

Transformer encoder-decoder

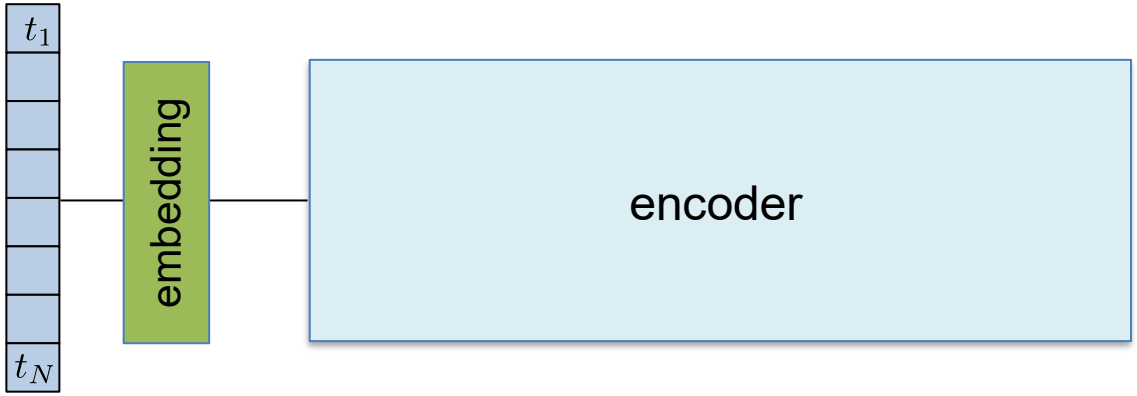

Transformer encoder-decoder

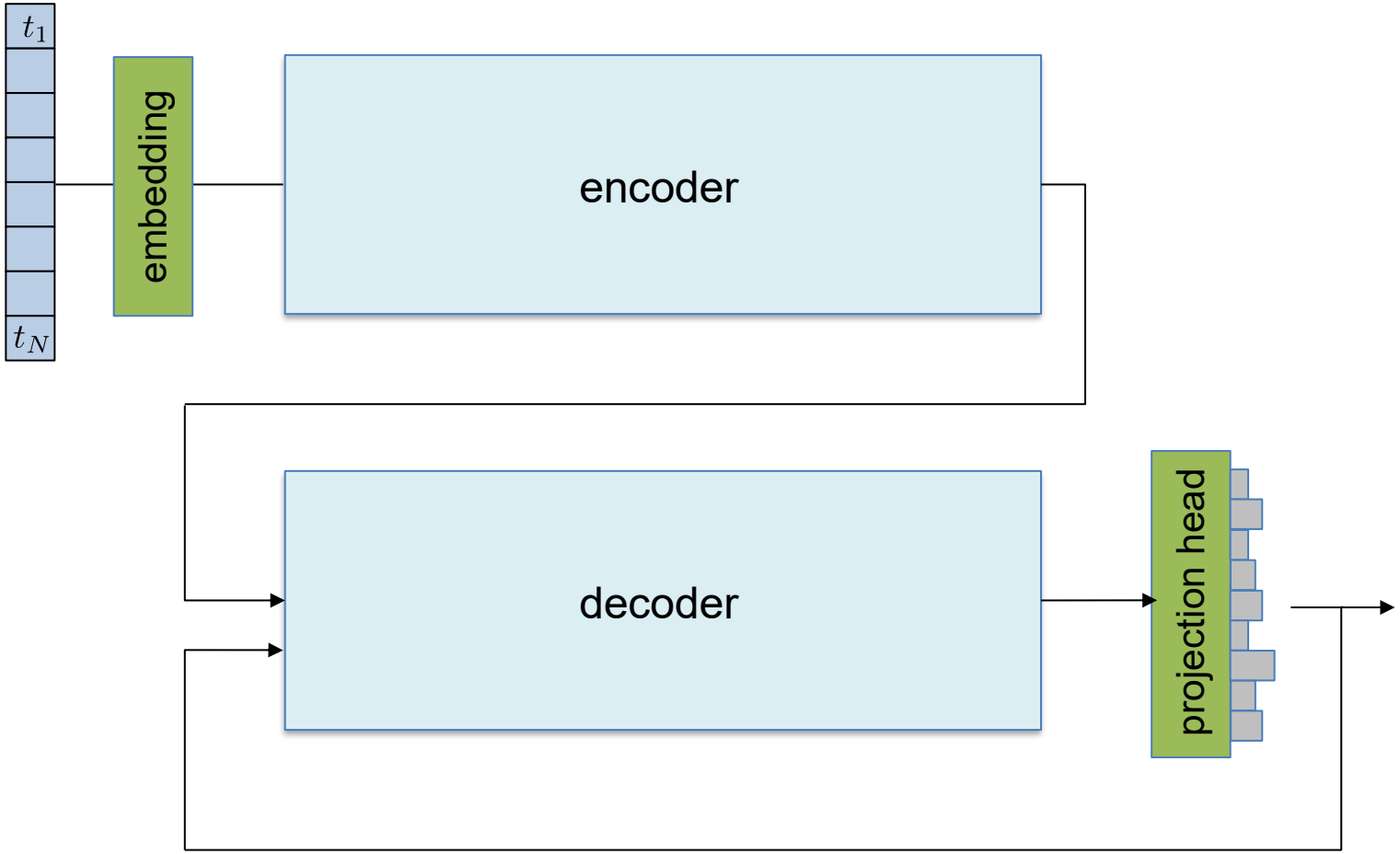

Transformer encoder-decoder

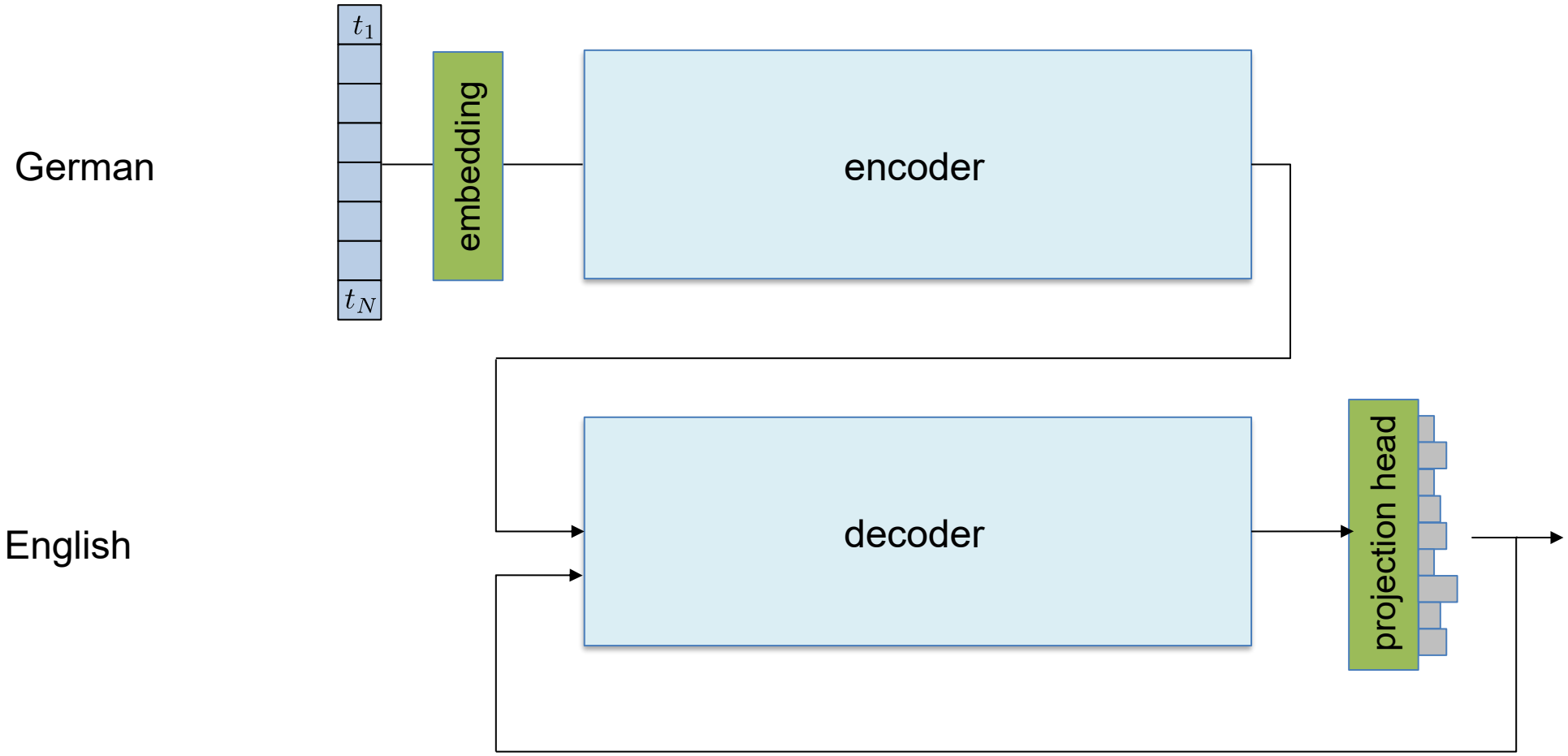

Transformer encoder-decoder

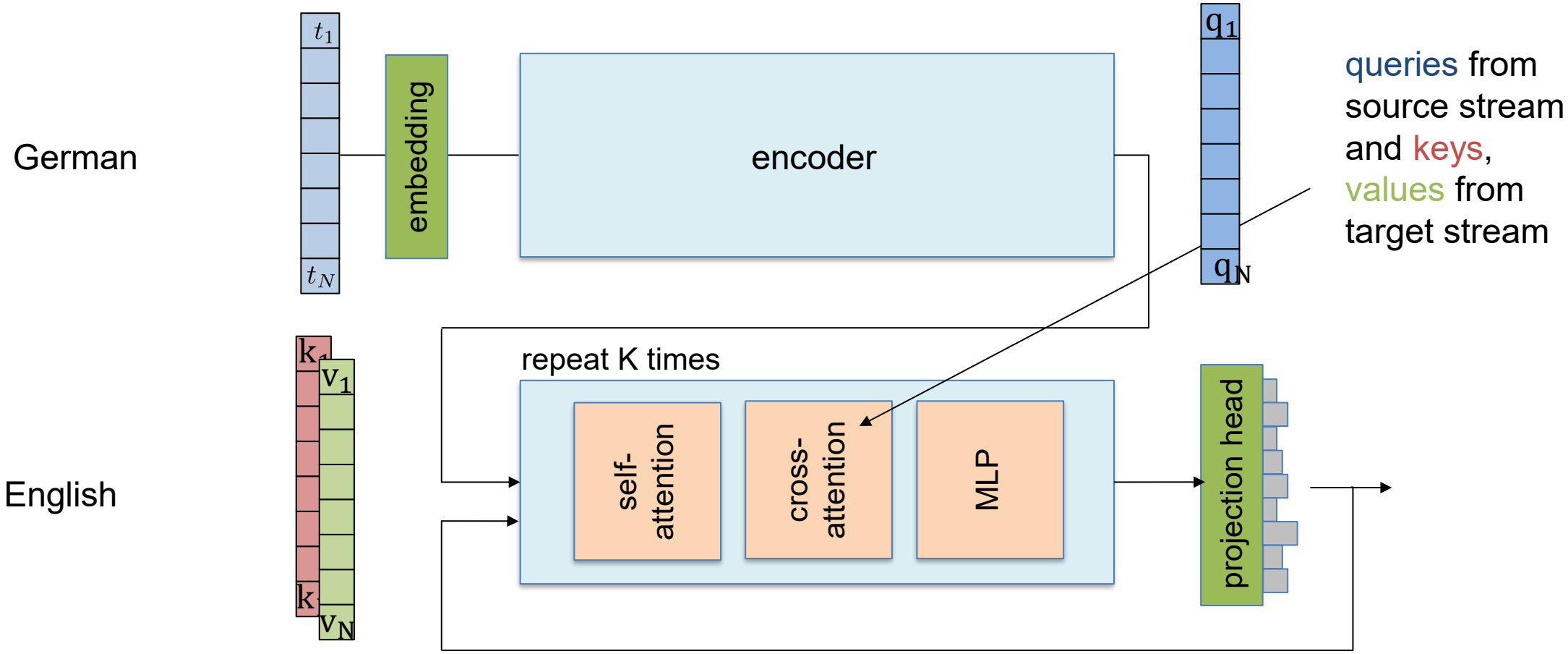

Transformer encoder-decoder

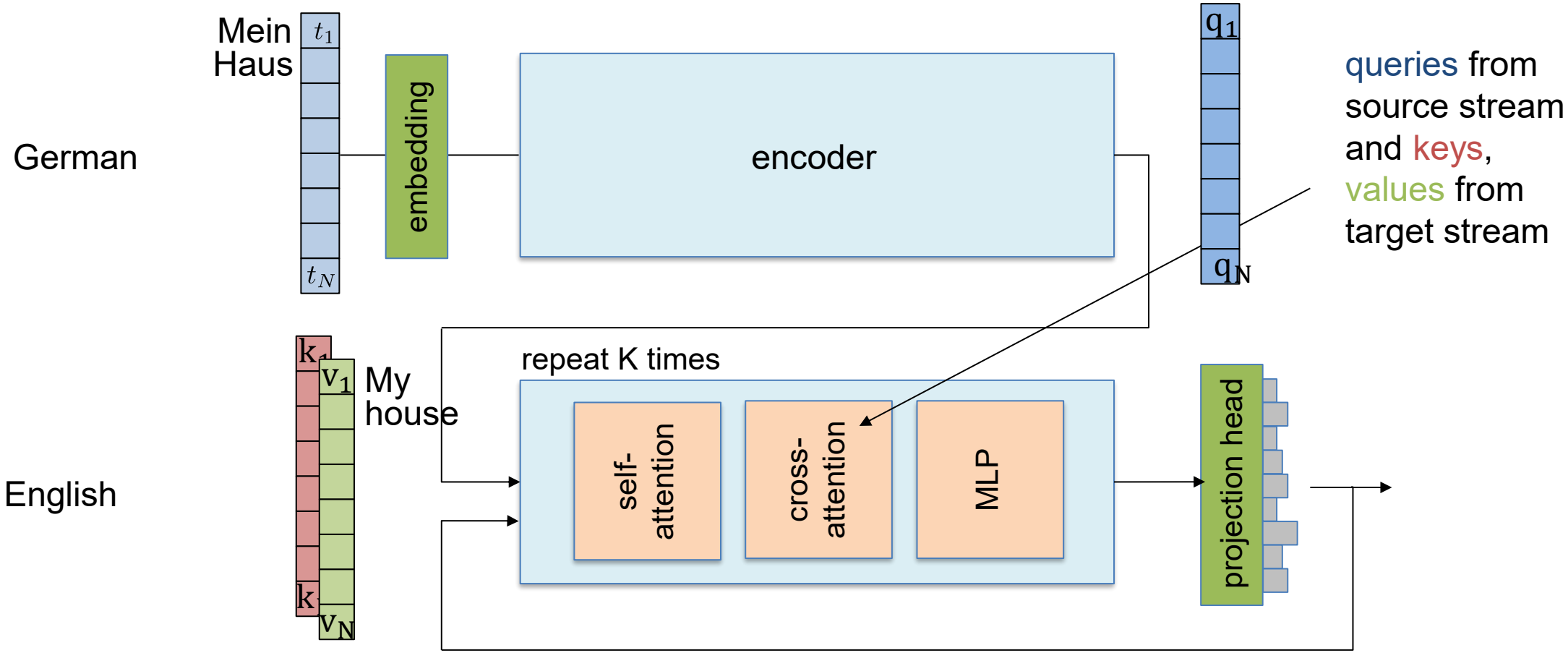

Transformer encoder-decoder

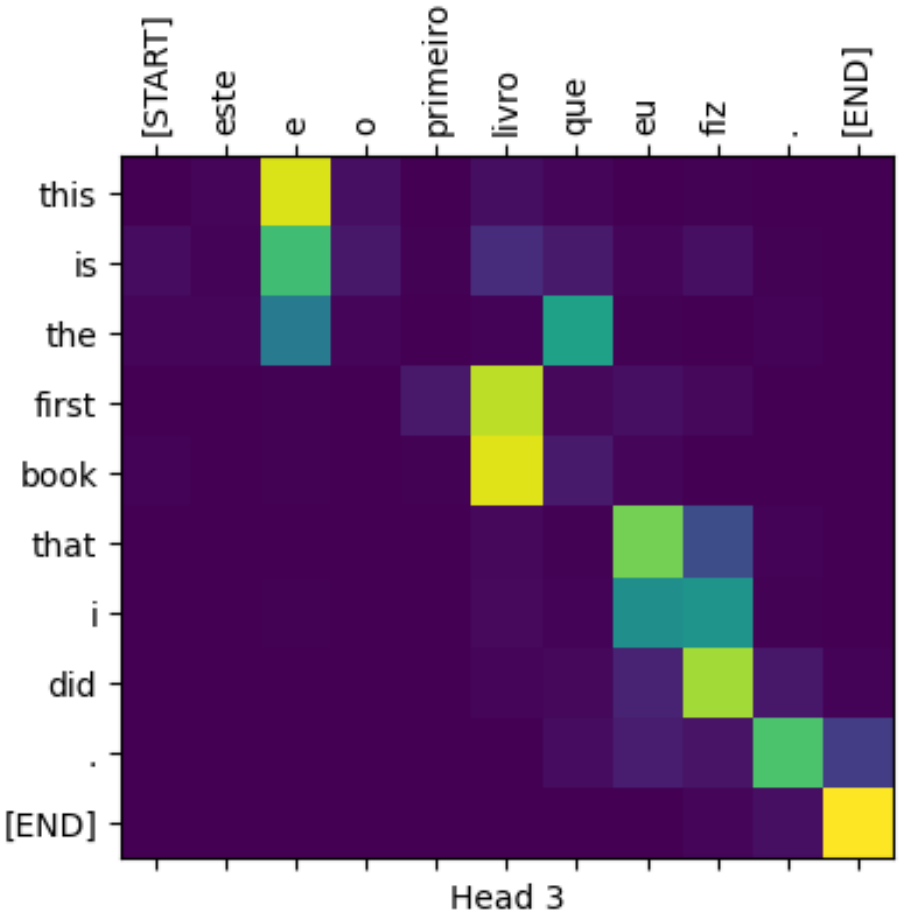

Extensions

- **Sparse attention**
  - *Problem to solve:* Attention is quadratic which quickly limits the number of tokens one can process
  - Sparse attention computes attention only between “likely” relevant tokens, e.g. nearby ones in a temporal stream
- Shared kv’s between heads
- qk LayerNorm
  - Additional layer norm in attention head (important for large models)

Why Use Transformers?

- **The pros**: Flexibility
  - Agnostic to the structure of the problem at hand
  - Missing values can be handled naturally
  - Scalable through parallelization

.

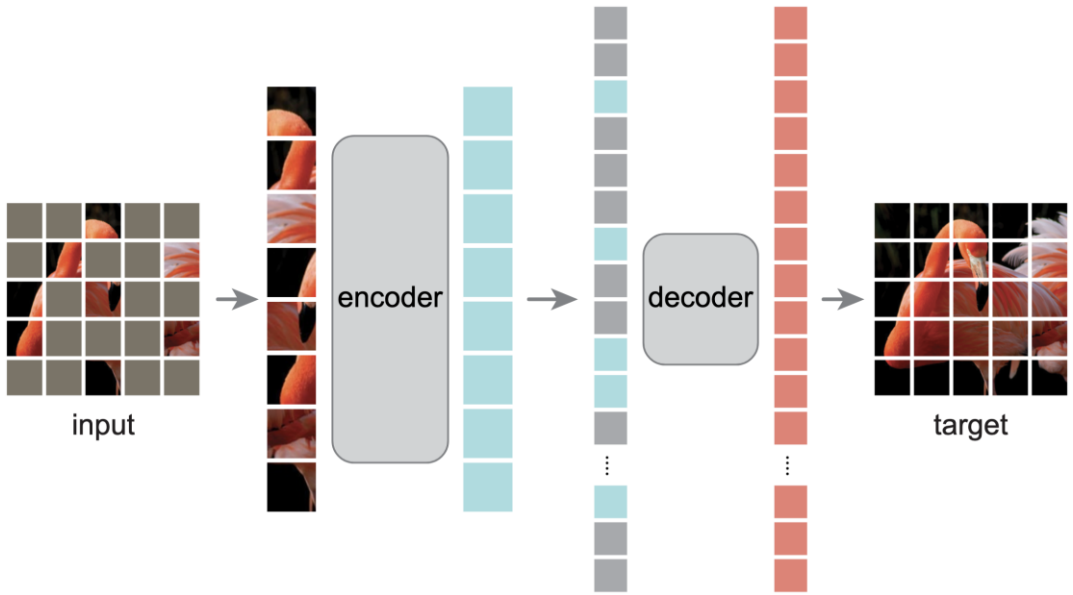

He, K., Chen, X., Xie, S., Li, Y., Dollár, P., & Girshick, R. (2022). Masked autoencoders are scalable vision learners. In *Proceedings of the IEEE/CVF conference on computer vision and pattern recognition* (pp. 16000-16009).

- **The cons**: Cost
  - Little inductive bias (requires more data to learn the task at hand)
  - High memory footprint

Diminishing Role of Architecture

"Our work reinforces the bitter lesson. The most important factors determining the performance of a sensibly designed model are the compute and data available for training. […]"

Smith et al., ConvNets match Vision Transformers at Scale, https://arxiv.org/pdf/2310.16764.pdf

Summary

- Transformer are standard neural network in many applications
- Sequence-to-sequence model operating on a set/sequence of tokens
- Versatile since only the definition of a token and the embedding network is domain specific
- Computationally highly efficient since software and hardware is optimized for them
  - But sparse attention required in general